EASTMAN
BLUE STREAK II
Model 629

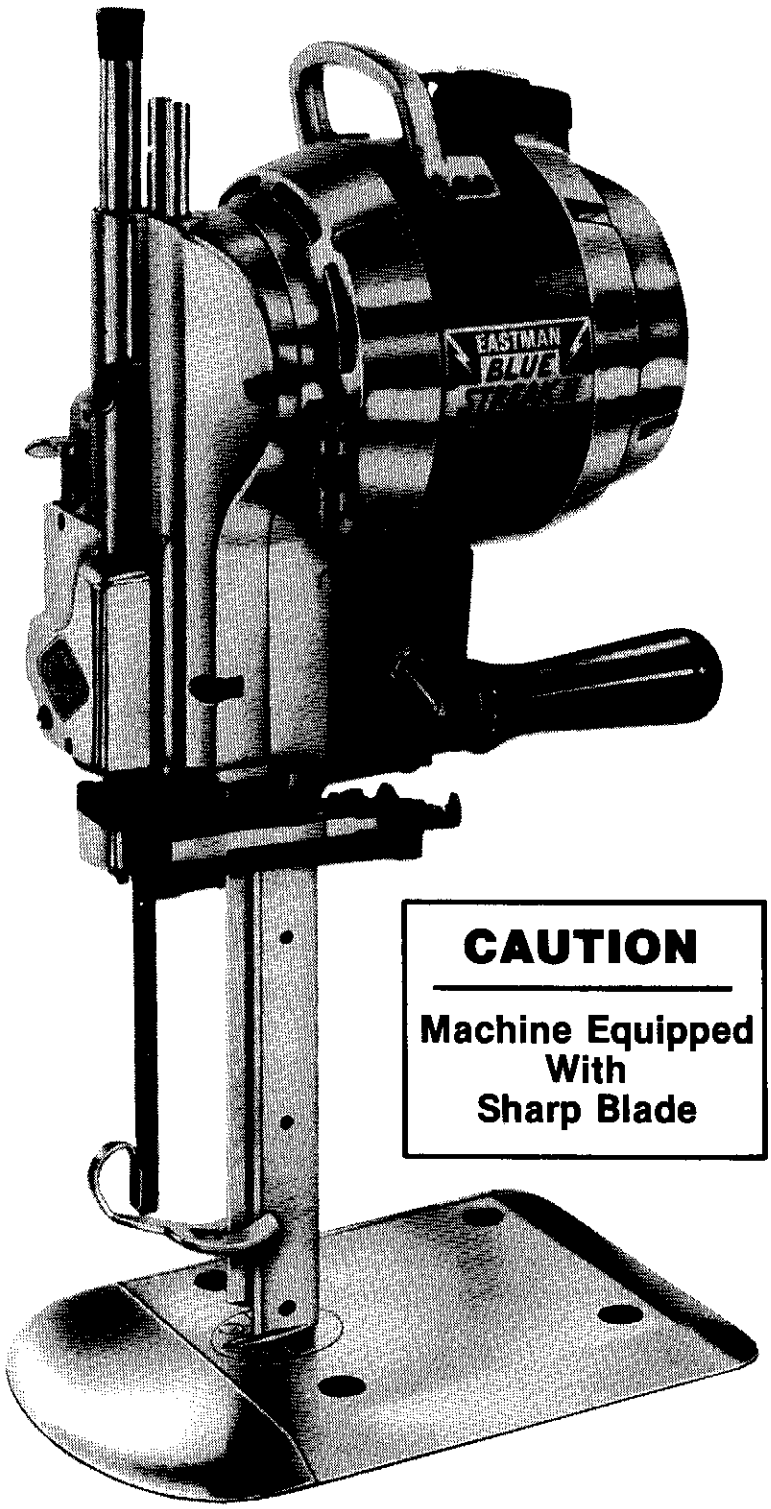

IMPORTANT

This part book contains instructions and part numbers for three different machine classes.

CLASS 625 ULTRONIC
CLASS 627 BRUTE
CLASS 629 BLUE STREAK II

When ordering parts please specify machine class no. and name. For electrical components also include voltage, Hertz & R.P.M. from label of your machine.

CAUTION

Machine Equipped With Sharp Blade

Some parts in this manual are covered by the following U.S. patents:

Patent No. 4609244
Patent No. 3714742
Patent No. 3775913
Patent No. 3960244

INSTRUCTION BOOK AND PARTS LIST

Eastman machine COMPANY
779 Washington St. • Buffalo, N.Y., U.S.A. 14203 • 716/856-2200 • Telex 4432018 • Cable EMCOBUF • Fax 716/856-1140

Operation, Lubrication And Care

Before operating machine, read these instructions carefully. Familiarize yourself with all functions and adjustments of this equipment.

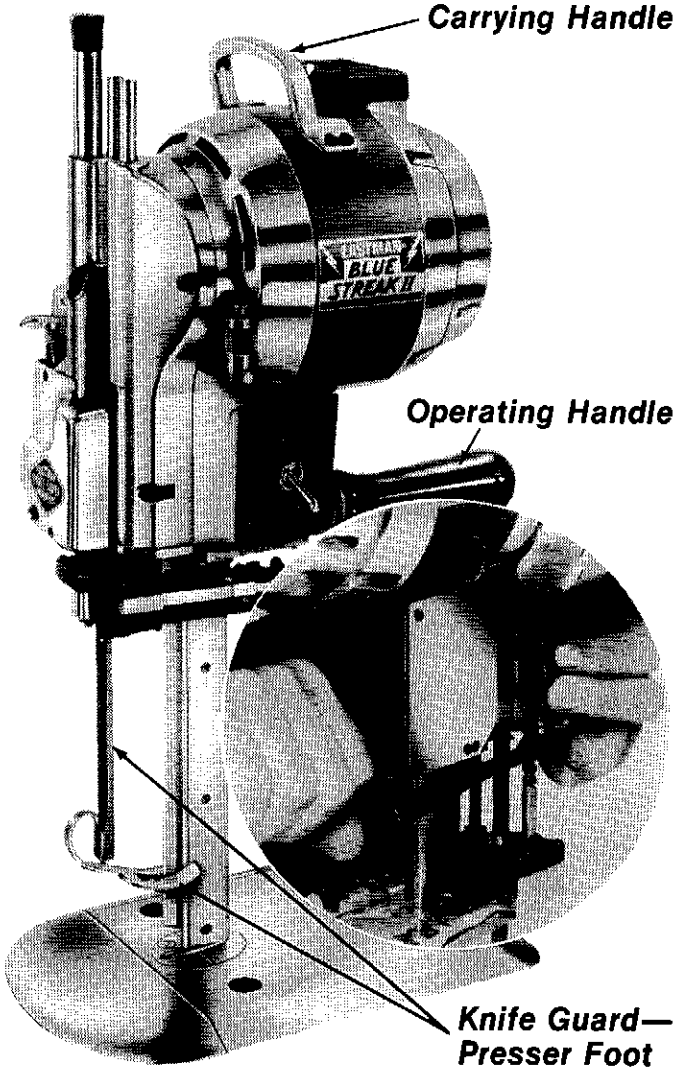

IMPORTANT:

Depress bell crank 584C3-16 release lever to return sharpener to locked position before starting.

WARNING: **Do not operate sharpener without knife in machine or the sharpener will be damaged. Do not shut off motor while sharpener is in motion.**

The purchaser must instruct all operators on the proper use of the equipment. All standard industrial safety measures and equipment should be provided to protect the operator. Operators must be cautioned that improper use of this equipment can cause bodily injury. If you do not have qualified operators to instruct new persons, contact your Eastman sales representative or write to Eastman Machine factory direct.

WARNING: **This machine is equipped with a sharp knife. Keep hands away from the knife area at all times. Use control levers and handles only when operating or handling machine. When machine is not in operation the KNIFE GUARD/PRESSURE FOOT should be kept lowered (by depressing lever R) to the base plate at all times, except when changing the knife or performing similar maintenance. When making a cut the KNIFE GUARD/PRESSURE FOOT should be raised by handle T only enough to clear the material being cut. When this equipment is not being utilized, the power supply should be disconnected from the machine.**

Before starting the motor, be sure that electric supply voltage and current are the same as stamped on the nameplate.
Fill oil cup A on Class 627, 629 (see illustration page 3). Fill oil cups, A, B and C on Class 625. Make sure the sharpener is in locked position. Push in turning knob F and turn the machine over a few revolutions by hand to see if the knife moves easily. If the knife does not move easily, sharpener is probably in an unlocked position. Use bell crank release lever H to return sharpener to locked position.

Proceed as follows: Check to see that motor switch is in off position. Connect attachment plug to terminal block on machine. With left hand straddle front of sharpener with fingers and thumb. Press in release lever H to dis-engage sharpener mechanism from motor. With right hand turn on motor switch, allow motor to gather full speed and then release lever H. This will automatically return sharpener to locked position. Knife must be in machine.

CAUTION: **For 3-phase machines direction of rotation must be as indicated by arrow on turning knob F. See tag attached to all 3-phase machines for instructions.**

For the first week or two, or after the machine has been idle for any length of time, the motor should be turned on and off a few times before running continuously. This permits the oil to warm up and flow easily into the closely fit moving parts. **IN COLD WEATHER, PLEASE KEEP MACHINE IN WARM PLACE.**

WARNING: **Before performing any of the following procedures, make sure that the attachment plug has been disconnected from power source.**

CARE OF MACHINE

Use air hose or bellows with proper eye shields and blow lint out of motor and sharpener twice a week. Remove cover Q and clean out lint around screw mechanism in sharpener once a week. Remove knife and clean knife slides with slot cleaner at least once a day. To prevent undue accumulation of lint, do not oil plate rollers. If rollers stick, remove from plate and wash in cleaning solvent.

TO SHARPEN THE KNIFE

Take the machine out of the lay. Drop KNIFE GUARD/PRESSURE FOOT by means of pressure foot lever R located next to machine operating handle. Press lever E downward with a slow, firm pressure to engage sharpening mechanism. Too fast lever action may cause lever to lock. If this occurs, lift lever D and start over. After a few tries you will feel correct operating pressure.

This machine is designed for hand held operation only. Eastman Machine Co. does not approve of the use of its machine when employed as a part of another machine. Nor does the company assume any responsibility should the machine be modified without prior factory approval or used in such a manner that the operator does not have continuous control over the cutting machine.

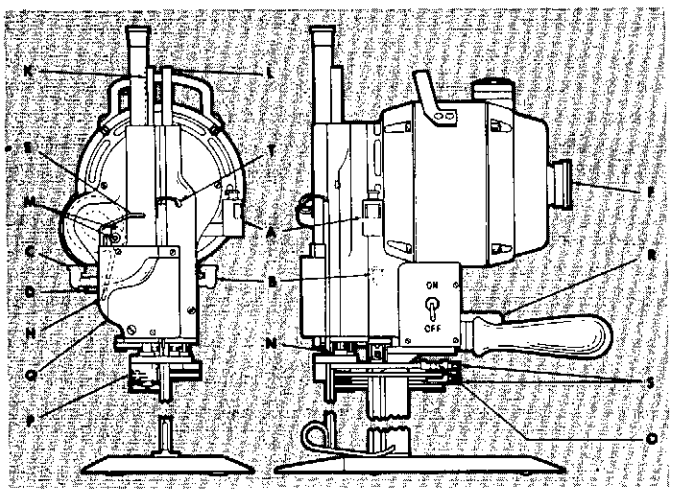

CAUTION: **Do not use sewing machine oil or detergent oil. It is entirely too light for cutting machine lubrication. For best results use specially compounded Eastman 30 weight non-detergent oil. Do not oil Base Plate Rollers.**

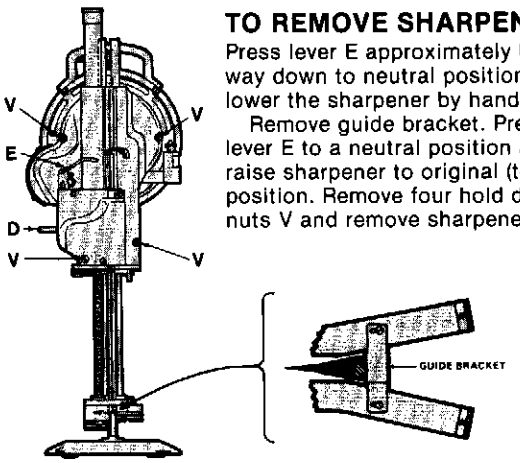

TO REMOVE SHARPENER

Press lever E approximately halfway down to neutral position and lower the sharpener by hand.

Remove guide bracket. Press lever E to a neutral position and raise sharpener to original (top) position. Remove four hold down nuts V and remove sharpener.

NOTE: **If lever E is pressed too far down (beyond neutral position) it will lock the sharpener bracket. To release, lift lever D and start over.**

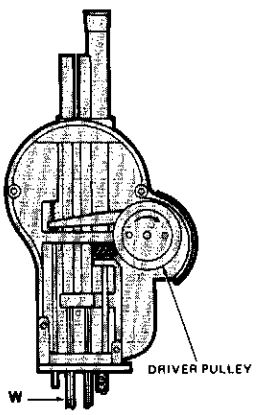

TO REPLACE RUBBER DRIVE PULLEY

The sharpener is driven by a rubber driver pulley which must be replaced when it wears down. To replace the rubber driver pulley proceed as follows: Remove sharpener from machine. See instructions above. Press lever E to neutral position and lower sharpener until an inch of square shaft W is exposed. Hold square shaft W with wrench. Wrench position on shaft should be as close as possible to sharpener housing. Use spanner wrench to remove driver pulley by turning clockwise as indicated by arrow (pulley has left-hand thread.) Reassemble new pulley on sharpener. Reassemble sharpener on machine.

LUBRICATION — DO NOT USE AN EXCESS AMOUNT OF OIL

Every 2 Hours - Daily	Once A Day	Once A Week	Once A Month
Fill oil cups A-B-C on Class 625.	Oil 2 places at M - use can with small spout (furnished with machine.) *Class 627 and 629 Fill oil cup A.	One drop only to: Tubes at K & L Turning Knob at F Pulley Shaft N Belt Pulleys O	Remove plug at P and insert grease tube. Squeeze an amount about equal to the size of a pea into opening.

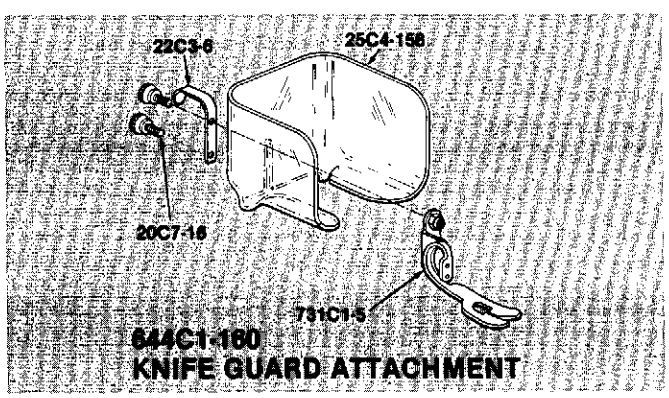

PLASTIC KNIFE GUARD ASSEMBLY

Eastman Machine Co. does not recommend the use of additional guarding implements. However at the request of customers only, a lucite guard can be made available as shown in the following illustration.

Part No.	No. Req'd.	Description
20C7-16	2	Thumb Screw
22C3-6	1	Lift Handle
25C4-158	1	Plastic Knife Guard
731C1-5	1	Pressure Foot (with Bracket)

Eastman machine COMPANY

Belt Sharpener

Adjustment Instructions

Class 625, 627 And 629

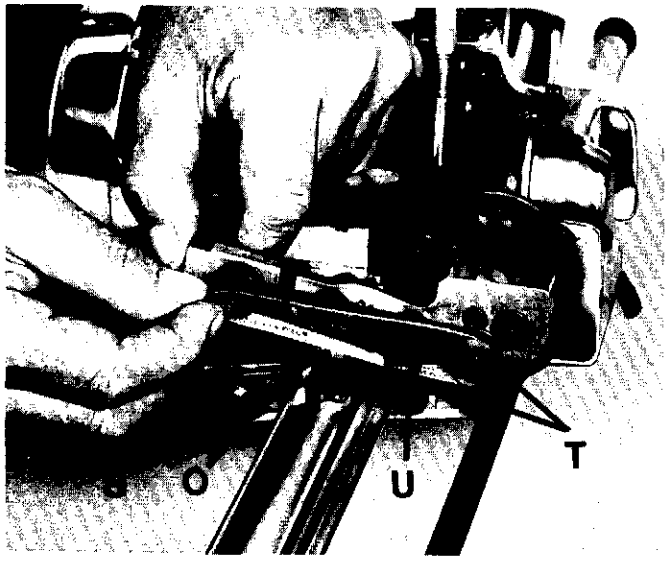

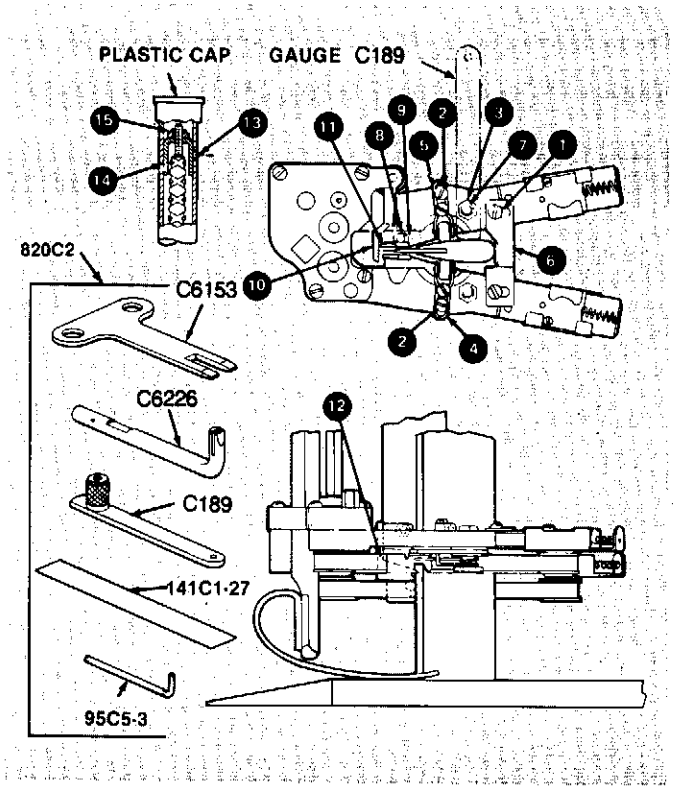

WARNING: **Before performing any of the following procedures, make sure that the attachment plug has been disconnected from power source.**

TO CHANGE SHARPENER BELTS

Push brackets S inward to release tension and remove worn belts. Place new belt over front pulley T, then between sharpener shoe U and knife and then over rear pulley O. Sharpener belts are available in 4 grits: Rough, Coarse, Medium and Fine. (See Page 7).

ADJUST STABILIZERS FOR CENTRAL ALIGNMENT

Disengage attachment plug. Depress sharpener lever (E) halfway and lower belt carrier to extreme bottom position. (See page 3) Loosen screws (1) and disengage back guide (6) from contact with standard. Loosen screws (2) and disengage stabilizers (4) and (5). Remove locknut (3). Install Gauge C189 on exposed threaded end of pivot screw (7) and press end of gauge against side of standard. Hold this position, engage opposite Stabilizer (4) firmly against side of standard and tighten screws (2). Remove tool C189, press positioned stabilizer (4) against side of standard, fasten opposite stabilizer (5) firmly against standard. Replace locknut (7). Reengage back guide (6) in loose contact with back of standard.

CHECK SHARPENER SHOES AND CLAMPING ARM

Shoes should swing in and out freely without excessive up and down play. If adjustment is necessary, loosen locknuts (3), tighten screws (7) as required.

Check Clamping Arm (10) with the belt carrier in the most downward position and the knife in the most upward position. Clamping Arm should hold shoe from moving in. If it fails to do so, serrations on clamping arm are worn or shoe (11) is worn. Parts should be replaced.

CHECK EXTREME DOWN POSITION OF SHARPENER

Correct down position is having the tip of the knife at the center of the belt on shoe (12) when the belt carrier is in the most downward position and the knife is in the most upward position. If the belts are too high, the bottom point of the knife will not sharpen, if the belts are too low, the bottom point of the knife will round off excessively.

If adjustment is necessary, raise belt carrier to up position. Remove plastic cap from tube for screw shaft. Use pin through hole in tube (13) to prevent spacer (14) from turning, remove locknut (15). Turn spacer clockwise with wrench C6153 to raise bottom position and counter clockwise to lower position. One turn adjusts 1/32". When spacer is adjusted use pin to hold spacer in position, re-assemble and tighten locknut (15). Replace plastic cap.

CHECK STOP SCREW (8) ON SHARPENER SHOE

With new belts on carrier, insert .010 feeler gauge #141C1-27 between stop screw and knife and be sure that clamping arm (10) has been released from Sharpener shoe (11). The gauge should just fill space between screw and knife. If adjustment is necessary, loosen locknut (9) adjust set screw to proper spacing and retighten locknut.

CHECK WIDTH OF BEVEL ON KNIFE

Bevel should be approximately 1/16" on both sides. Install new knife and new belts. Color bevel with wax pencil. Run sharpener up and down several times. If adjustment is required: for Flex-Pad shoes insert Tool C6226 over the belt guide pad and move free end of tool to the rear to increase the bevel, to the front to decrease the bevel.

WARNING: **Whenever servicing machine; check tightness of Plate Bolt Nut before resuming cutting operation.**

ALL SPECIAL TOOLS FOR SHARPENER ADJUSTMENT CAN BE OBTAINED BY ORDERING TOOL KIT #820C2.

CAUTION | **Discard used sharp knives with care.**

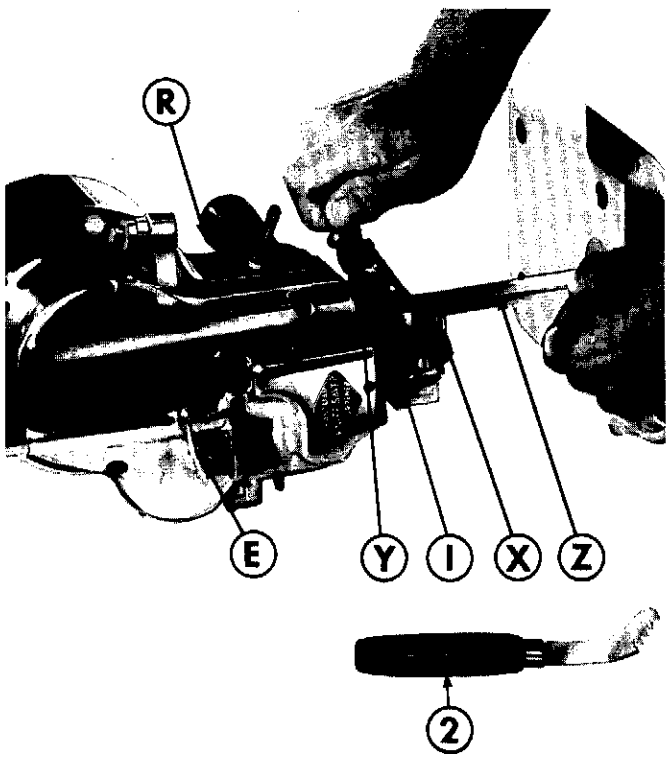

FOR BEST RESULTS USE ONLY EASTMAN KNIVES

The guarantee covering your Blue Streak II Straight knife is not valid if knives other than those manufactured by Eastman are used.

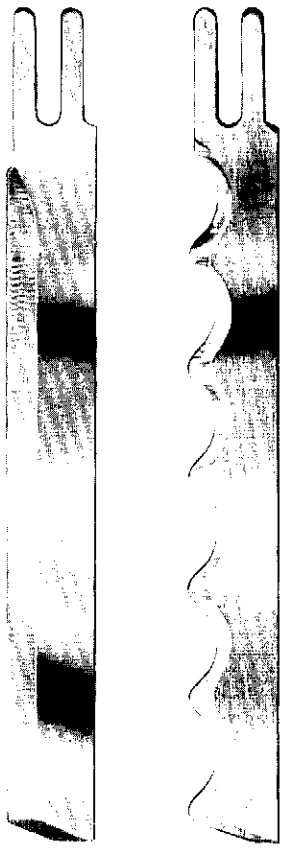

STRAIGHT KNIFE | WAVE KNIFE

TO CHANGE THE KNIFE

Make sure sharpener is in locked position. Raise pressure foot X to top position by means of pressure foot lever R, located next to machine operating handle. Lay machine on table as shown. Press in turning knob F and turn knife to bottom position. Insert T-handle knife bolt wrench Y as shown and loosen knife lockbolt (1). Remove knife through bottom of standard Z. After removing knife, clean knife slot in standard with slot cleaner (2). Insert new knife in knife slot. Be sure to set knife tightly up against knife lock bolt and at the same time hold the bottom of the knife against the back of the slot in the standard when tightening knife lockbolt. After tightening knife lockbolt, check to see if knife runs freely in standard by rotating turning knob. Install new sharpener belts and operate sharpener three or four times before starting to cut.

WAVE KNIVES REQUIRE SPECIAL SHOES AND RELATED PARTS LISTED BELOW

743C1-27	L.H.SHOE	743C1-26	R.H.SHOE
34C10-47	L.H.SPRING	34C10-57	R.H.SPRING
20C12-57	SCREW (For shoe)	20C12-57	SCREW (For shoe)

WHEN USING THESE SPECIAL SHOES THE FOLLOWING PARTS MUST BE REMOVED FROM THE LOWER GEAR BRACKET

35C7-28 CLAMPING ARM
34C10-123 SPRING
20C12-143 SCREW

SEE PAGE 21

SEE PAGE 19 FOR SLOW SPEED DRIVE NOTE

STRAIGHT KNIFE SELECTION CHART

	CARBON STEEL			HIGH SPEED STEEL					SPECIAL PROCESS
Knife Size	STRAIGHT FRONT	SAW TOOTH	WAVE EDGE	STRAIGHT FRONT	ROUND TIP	ANGLE TIP	SAW TOOTH	WAVE EDGE	STRAIGHT FRONT
4	80C4	80C4-14	80C4-19	80C4-HS			80C4-14HS	80C4-19HS	
5	80C5	80C5-14	80C5-19	80C5HS	80C5HS-R	80C5-36HS	80C5-14HS	80C5-19HS	80C5SP
6	80C6	80C6-14	80C6-19	80C6HS	80C6HS-R	80C6-36HS	80C6-14HS	80C6-19HS	80C6SP
7	80C7	80C7-14	80C7-19	80C7HS	80C7HS-R	80C7-36HS		80C7-19HS	80C7SP
8	80C8	80C8-7	80C8-19	80C8HS	80C8HS-R	80C8-36HS		80C8-19HS	80C8SP
9	80C9		80C9-19	80C9HS	80C9HS-R	80C9-36HS		80C9-19HS	80C9SP
10	80C10		80C10-19	80C10HS	80C10HS-R	80C10-36HS		80C10-19HS	80C10SP
11½	80C11½			80C11½HS	80C11½HS-R	80C11½-36HS		80C11½-19HS	80C11½SP
13	80C13			80C13HS	80C13HS-R				80C13SP

80C6-47 HS 6" High Speed Wave Special Grooved Knives for Micro Fog Machine
80C7-47 HS 7" High Speed Wave Special Grooved Knives for Micro Fog Machine

Teflon coated knives available. Order by adding "T" to end of knife number.

Eastman machine COMPANY

EASTMAN

BEVEL-BLOC®
Sharpener Shoes

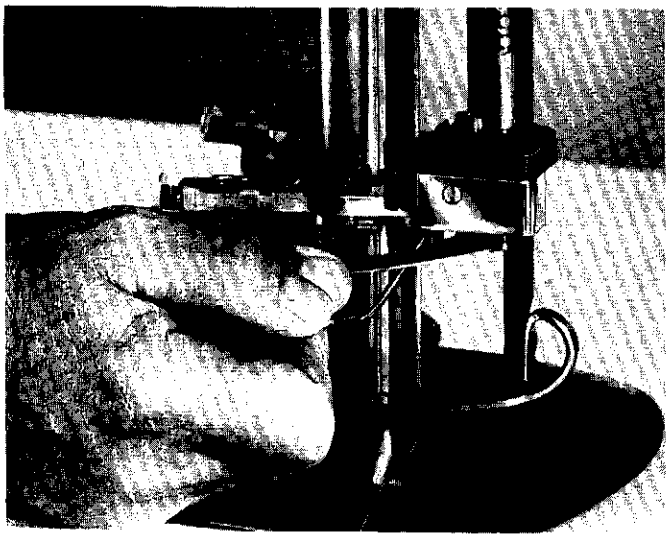

TO ADJUST BEVEL BLOC® SHOES Eastman's exclusive patented adjustable Bevel-Bloc sharpener shoes make it possible to grind any desired bevel on the knife edge. The knife edge bevel on your new machine is factory set to handle all normal fabrics and should not be changed. Normally an acceptable bevel is 1/16" wide. If necessary to adjust the bevel on the knife edge to a different length proceed as follows:

Refer to diagram on page 3 and lower the knife to the bottom of the stroke with machine turning knob F. Lower the sharpener by hand, by holding the sharpener operating lever E halfway down to its neutral position. To change cutting bevel on knife, pull sharpener belt down to expose set screw on Bevel-Bloc. Insert Allen Wrench 95C5-5 into set screw and loosen slightly. For longer bevel on knife edge, move key and bloc to the rear; for shorter bevel, to the front. Re-tighten set screw. Adjust Bevel-Blocs on both shoes. After adjustment of Bevel-Blocs, return sharpener to top (locked) position. Check stop screws on sharpener shoes for correct setting as outlined in instructions on page 4. Color mark front sides of knife edge with marking ink or wax pencil. Turn on power and run sharpener down and up several times and then check bevel on both sides of knife. Readjust if necessary.

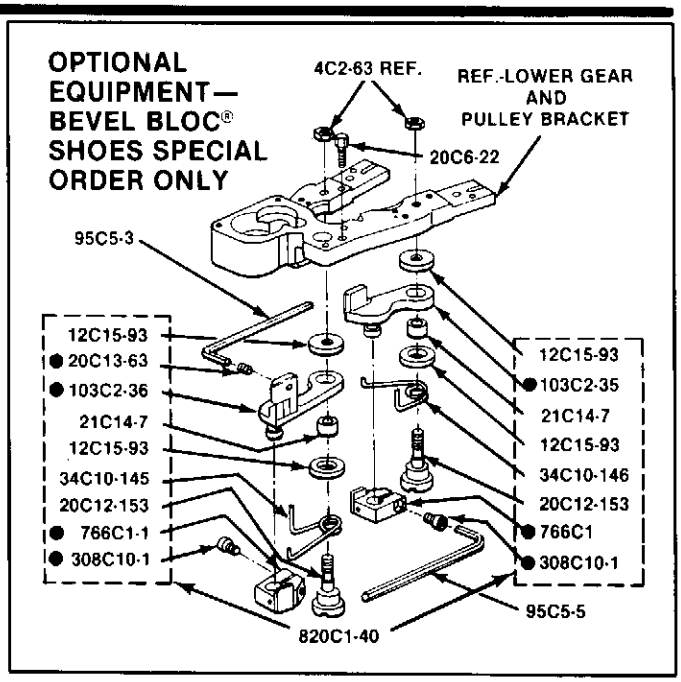

Part No.	Description
4C2-63	L.H. Nut (2 Req'd)
715C1-16	Lower Gear Bracket Complete 5" - 10" Knife
715C1-18	Lower Gear Bracket Complete 11½" - 13" Knife
820C1-40	Conversion Kit - R.H. & L.H. Shoes
	INCLUDES THE FOLLOWING
12C15-93	Washer Shoe (4 Req'd.)
*20C6-22	Screw Adjust
20C12-153	Screw Sharpener Shoe (2 Req'd.)
20C13-63	Screw Set
21C14-7	Bushing Shoe (2 Req'd.)
34C10-145	Spring Shoe LH
34C10-146	Spring Shoe RH
94C5-3	Wrench Allen
*95C5-5	Wrench Allen
103C2-35	Shoe Sharpener RH
103C2-36	Shoe Sharpener LH
*308C10-1	Screw 6/32 x 5/16" Soc. (2 Req'd.)
★ *766C1	Bevel Block Assem. RH
★ *766C1-1	Bevel Block Assem. LH
820C1-39	Conversion Kit includes parts * above

★ NOTE: 766C1 and 766C1-1 sold in pairs with kits only.

EASTMAN'S BEVEL BLOC® SHARPENER ASSEMBLY IS COVERED BY PATENT NOS. 2,629,474 AND 3,350,818

● Subassembly 743C3-1 includes:
20C13-63 / Screw, Set
103C2-36 / Shoe, Sharpener LH
766C1-1 / Bevel Block Ass'y LH
308C10-1 / Screw 6/32" x 5/16", Socket (2 req'd.)

● Subassembly 743C3 includes:
103C2-35 / Shoe, Sharpener RH
766C1 / Bevel Block Ass'y RH
308C10-1 / Screw 6/32" x 5/16", Socket (2 req'd.)

Maintenance Supplies

Part No.	Description
529C1-8	Knife Bolt Wrench
95C5-3	Allen Wrench for Shoe Set Screws
*607C1-29	Class 625 & 629 Knife Slide Oiling Device
*607C1-33	Class 627 Knife Slide Oiling Device
242C2-2	Eastman Bearing Grease
36C6	Sharpener Cleaning Brush
141C1-27	Feeler Gauge for Shoe Set Screws
162C2	Oil Can
*242C1	1/2 Pint Eastman Oil
81C1-2	Slot Cleaner
*34C9-9	Trolley Spring

*Optional

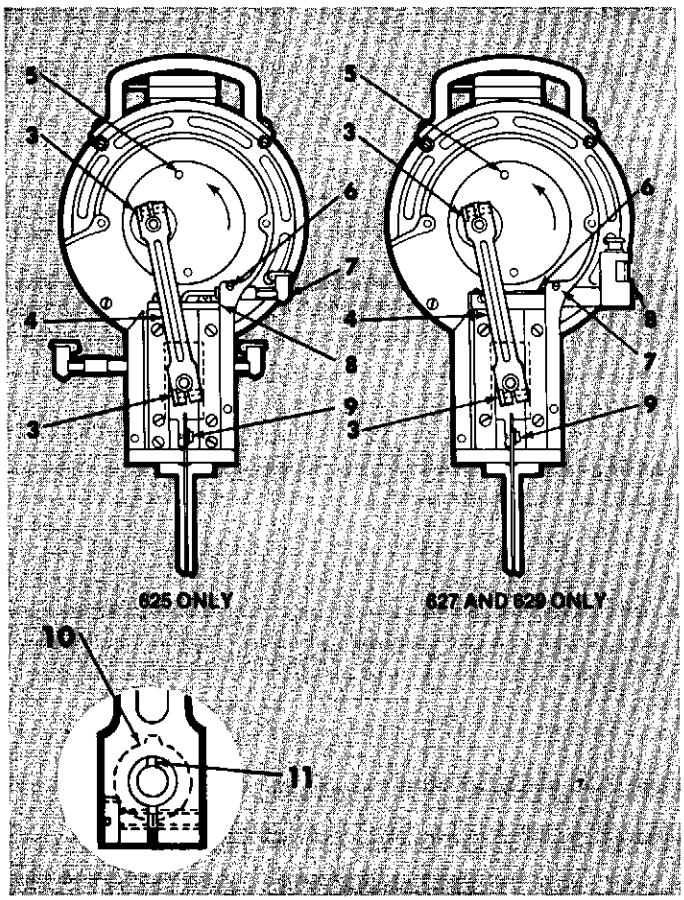

TO FREE FROZEN GUIDES

Remove sharpener from machine as explained on page 6. Remove knife. Loosen screws (3) and remove connecting rod (4). Insert drift pin in hole (5) in crank and tap with light hammer in direction of arrow. This will loosen crank. Remove crank. On Class 625 loosen set screw (6) using No. 564 Allen Key (.078 hex) and remove oiler and tube (7). Remove oil pad holder (8). On Class 627 and 629 remove screws and oil tube cover (6). Remove screws (7) and remove oil tube (8). Remove crosshead (9) from guides. Use a fiber or brass rod against the bottom of crosshead and drive crosshead out through the top of the guides.

NOTE: **If wrist pin is frozen in crosshead, drive wrist pin out of crosshead with soft punch. Polish wrist pin and hole in crosshead with fine emery cloth.**

Hone rough spot on bearing surface of crosshead against a flat oilstone until smooth. Examine guides. If any evidence of high spot, remove with scraper and clean. Oil bearing surface of guides, insert crosshead and reassemble machine. Be sure washer (10) is in place between connecting rod and crosshead.

CAUTION: **Wrist pin must be installed with notch (11) at top center. Otherwise flow of oil to wrist pin bearing will be cut off.**

Run machine for approximately one-half hour, oiling guides frequently before putting machine back into production.

EASTMAN'S FOUR ABRASIVE BELT GRITS OFFER AN EDGE FOR EVERY FABRIC

For increased cutting efficiency, Eastman offers four different edges as produced by four different abrasive belts. These belt grits are available in convenient color-coded boxes for easy identification.

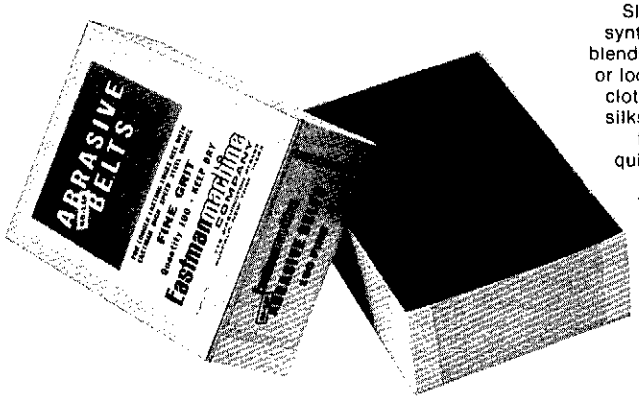

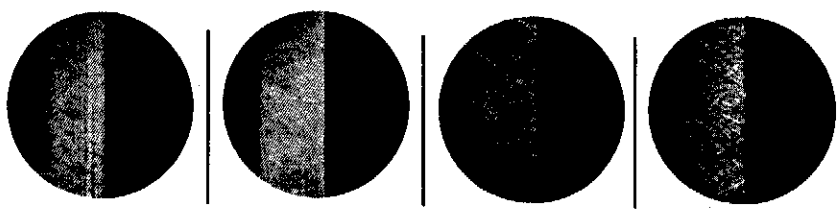

FINE BELT
FINE EDGE
Slices thru synthetics and blends, for knitted or loosely woven cloths, and for silks, high pile fabrics, quilting, etc.
BLUE
181C2-5

MEDIUM BELT
MEDIUM EDGE
Shears thru the general run of rayons, cottons, light woolens, tropicals, suitings and similar materials.
GREEN
181C2-2

COARSE BELT
COARSE EDGE
For heavier weight variations of the "medium" materials at left, and for tightly woven cloths, pocketing, light denims, over-coatings and light leatherette and rubberized fabrics.
RED
181C2-1

ROUGH BELT
ROUGH EDGE
The edge that practically SAWS thru heavy denims, coated fabrics, treated canvas, simulated heavier leathers, etc.—where the going gets tough!
BLACK
181C2-6

SPECIAL PERFORMANCE BELTS: Electrostatically Coated

FINE BELT	MEDIUM BELT	COARSE BELT
BLUE	GREEN	RED
181C2-5SP	181C2-2SP	181C2-1SP

250X micro-photos show
four different edges as produced by
EASTMAN'S four abrasive belt grits above.
...ONE JUST RIGHT FOR THE FABRIC YOU'RE CUTTING!

Eastmanmachine COMPANY

Illustrated Parts List

Your Eastman Straight Knife has been carefully designed to provide many hours of trouble free operation. The comprehensive exploded parts illustrations have been carefully prepared to enable you to easily order replacement parts, as required. Replacement parts for this machine may be ordered thru your nearest Eastman representative or directly from the Eastman factory.

IMPORTANT: **Always specify machine class number and serial number when ordering parts for faster more efficient service.**

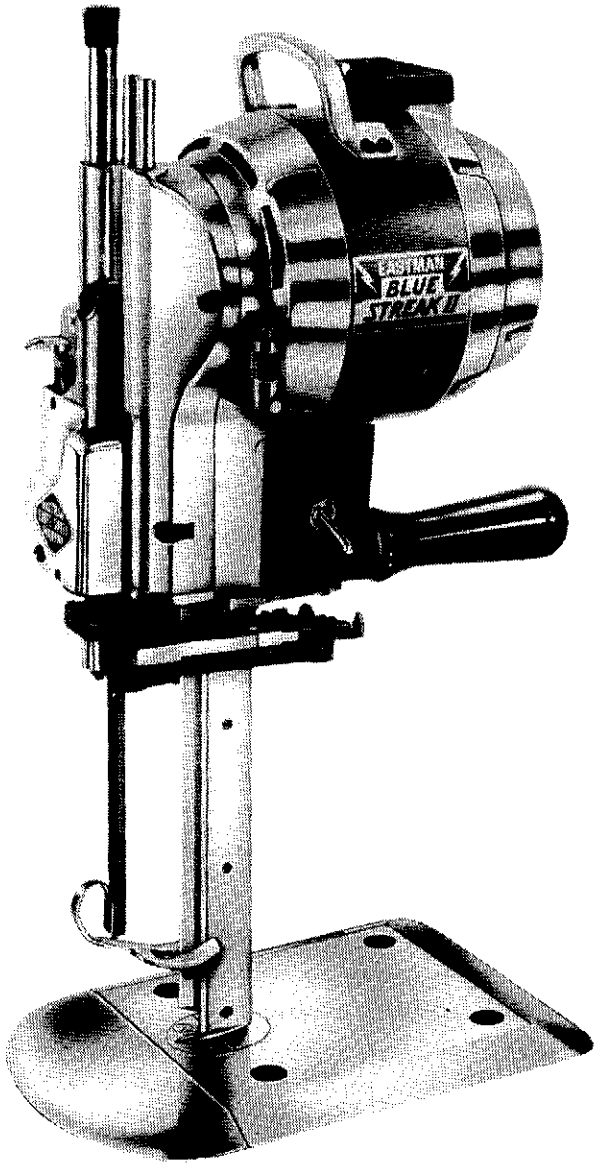

NOTE: **Please specify model and serial number of machine when ordering parts.**

Index

EXPLODED PARTS ILLUSTRATIONS

The exploded parts illustrations and parts lists in this section have been divided into major assemblies as follows:

MOTOR ASSEMBLIES

Single Phase, Single Speed	Pages 10, 11
Single Phase, Dual Speed	Pages 10, 11
Three Phase, Single Speed	Pages 12, 13
Three Phase, Dual Speed	Pages 12, 13

FRONT BEARING HOUSING ASSEMBLY

See pages 14 and 15.

SHARPENER HOUSING ASSEMBLY

Front View see pages 16 and 17.
Rear View see pages 18 and 19.

LOWER GEAR BRACKET ASSEMBLY

See pages 20 and 21.

NOTE: **Four different abrasive belt grits (designed to provide you with a selection of edges) may be ordered for this machine. See page 7 of this manual for more information.**

STANDARD AND BASE PLATE ASSEMBLY

See pages 22 and 23.

NOTE: **Knife slide and standard height indicated on pages 22 and 23 are based on the length of knife and do not refer to physical dimensions. e.g. a 6″ knife slide accommodates a 6″ knife. Ordering information and part numbers for knives may be found on page 5.**

FASTENERS REQUIRED TO ASSEMBLE MAJOR COMPONENTS

Part No.	No. Req'd. Class 625	Class 627	Class 629	Description
4C1-99	3	3	3	Sharpener Hold Down Nut
4C1-150	1	1	1	Sharpener Hold Down Nut
4C1-179	4	0	4	Front to Rear Bearing Nut
4C1-179	0	8	0	Front to Rear Bearing Nut
4C2-2	1	1	1	Plate Bolt Nut
15C13-54	0	4	0	Front to Rear Stud
20C3-29	4	0	4	Front to Rear Bearing Screw
20C13-96	4	4	4	Standard to Bearing Screw
24C4	1	1	1	Plate Bolt

© Eastman Machine Company 1983

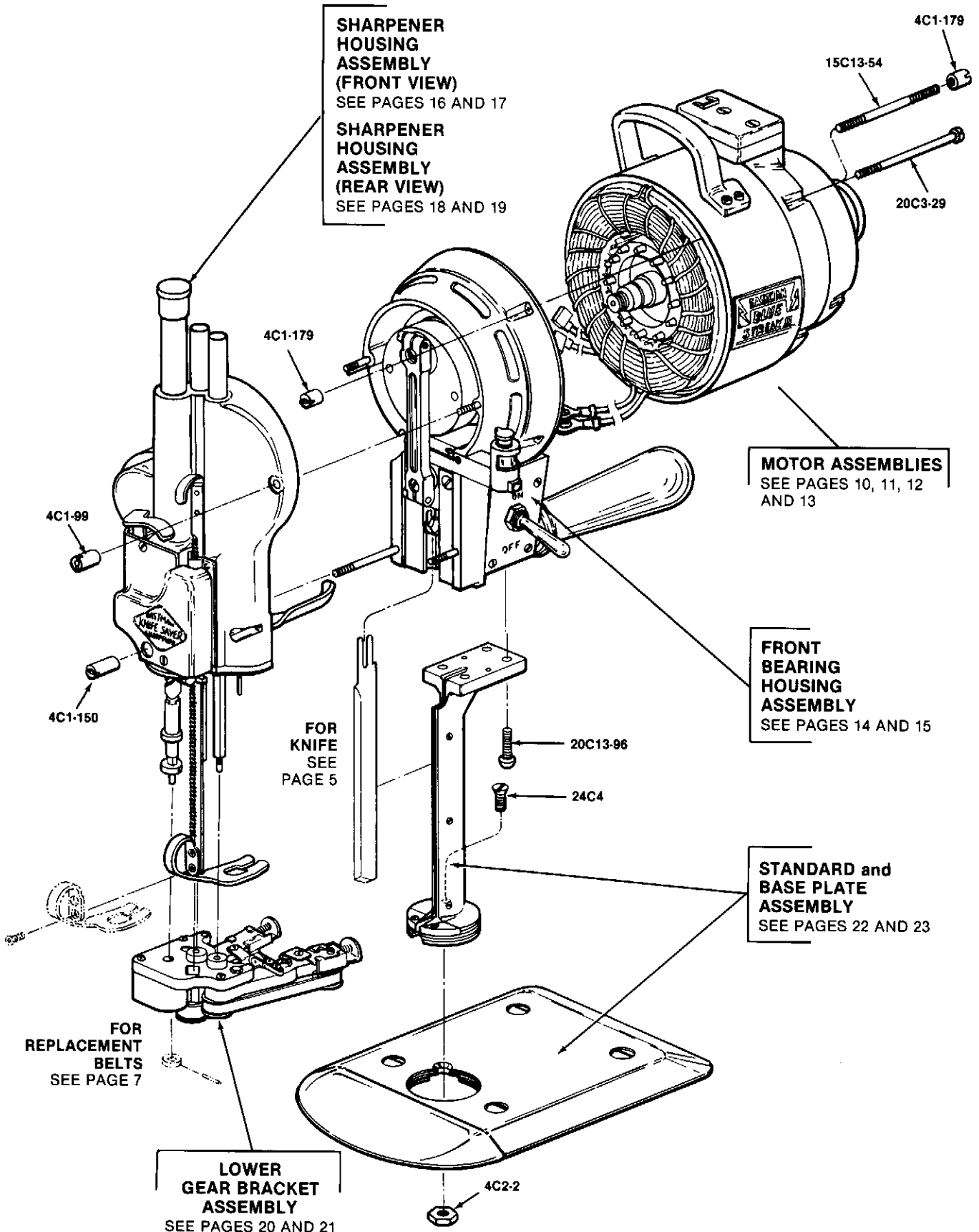
SHARPENER HOUSING ASSEMBLY (FRONT VIEW)
SEE PAGES 16 AND 17
SHARPENER HOUSING ASSEMBLY (REAR VIEW)
SEE PAGES 18 AND 19
4C1-179
15C13-54
20C3-29
4C1-179
MOTOR ASSEMBLIES
SEE PAGES 10, 11, 12 AND 13
4C1-99
4C1-150
FRONT BEARING HOUSING ASSEMBLY
SEE PAGES 14 AND 15
FOR KNIFE SEE PAGE 5
20C13-96
24C4
STANDARD and BASE PLATE ASSEMBLY
SEE PAGES 22 AND 23
FOR REPLACEMENT BELTS
SEE PAGE 7
LOWER GEAR BRACKET ASSEMBLY
SEE PAGES 20 AND 21
4C2-2

Single Phase

Motor Assemblies

(Single and Dual Speed)

Illustrated Parts List

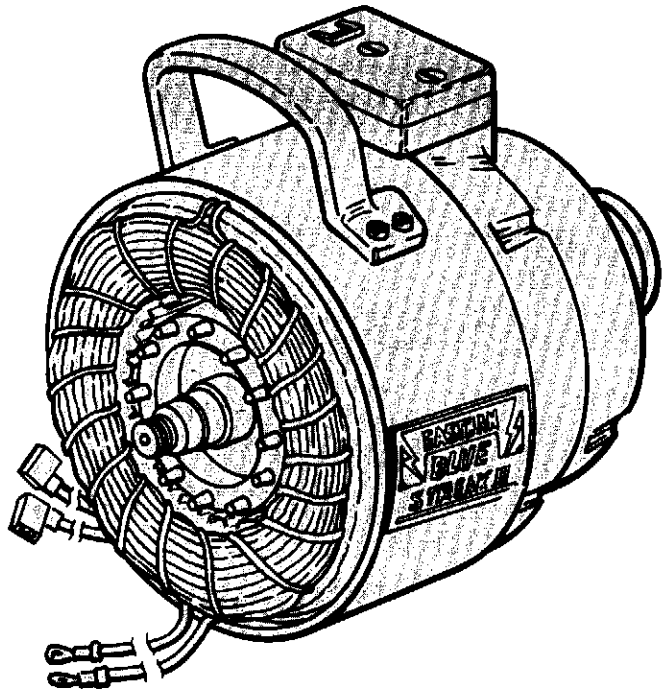

NOTE: Please specify model and serial number of machine when ordering parts.

Part No.	No. Req'd. Class 625	Class 627	Class 629	Description
4C1-145	1	1	1	Shaft Lock Nut
4C2-87	1	1	1	Clutch Nut
6C12-4	2	2	2	Lead Wire Insulation
10C1-41	1	1	1	Rotor Fan
12C1-12	1	1	1	Loading Spring Washer
12C1-32	1	1	1	Lock Washer
13C1-9	1	1	1	Turning Knob
18C6-10	1	1	1	Retaining Ring
22C1-24	1	1	1	Carrying Handle
30C1-8	1	1	1	Cover For Cutout
34C1-51	1	1	1	Clutch Spring
53C7-35	1	1	1	Fan Cover
67C1-10	1	1	1	Cutout Switch Mount
73C7-93	1	1	1	Insulation
73C7-121	1	1	1	Tubing for Lead Wires
90C1-146	1	1	1	Rear Bearing Housing
90C6-46	1	1	1	Rear Ball Bearing
199C1-19	2	2	2	Wire Lug
199C1-23	2	2	2	Wire Lug
254C1	1	1	1	Cable Tie
300C12-5	2	2	2	Screw, 8-32 x 7/16 Round Hd.
300C12-6	4	4	4	Screw, 8-32 x 1/2 Round Hd.
301C8-1	3	3	3	Screw, 4-40 x 1/2 Fillister Hd.
305C8-1	3	3	3	Screw, 4-40 x 1/4 Binding Head
305C10-1	1	1	1	Screw, 6-32 x 1/4 Binding Hd.
513C3-206	1	0	1	Rotor with Shaft
513C3-225	0	1	0	Rotor with Shaft
514C3-64	1	0	0	Stator with Band 110V. 50Hz. 3000 R.P.M.
514C3-65	1	0	0	Stator with Band 110V. 50Hz. 1500 R.P.M.
514C3-67	1	0	0	Stator with Band 110V. 60Hz. 3600 R.P.M.
514C3-68	1	0	0	Stator with Band 110V. 60Hz. 1800 R.P.M.
514C3-73	1	0	0	Stator with Band 220V. 50Hz. 3000 R.P.M.
514C3-74	1	0	0	Stator with Band 220V. 50Hz. 1500 R.P.M.
514C3-76	1	0	0	Stator with Band 220V. 60Hz. 3600 R.P.M.
514C3-77	1	0	0	Stator with Band 220V. 60Hz. 1800 R.P.M.
514C3-72	1	0	0	Stator with Band 150V. 60Hz. 3600 R.P.M.
514C3-66	1	0	0	Stator with Band 110V. 50Hz. 1500/3000 R.P.M.
514C3-69	1	0	0	Stator with Band 110V. 60Hz. 1800/3600 R.P.M.
514C3-75	1	0	0	Stator with Band 220V. 50Hz. 1500/3000 R.P.M.
514C3-78	1	0	0	Stator with Band 220V. 60Hz. 1800/3600 R.P.M.
514C3-109	0	1	0	Stator with Band 110V. 60Hz. 3600 R.P.M.
514C3-110	0	1	0	Stator with Band 220V. 60Hz. 3600 R.P.M.
514C3-113	0	1	0	Stator with Band 230V. 50Hz. 3000 R.P.M.
514C3-114	0	1	0	Stator with Band 110V. 60Hz. 1800/3600 R.P.M.
514C3-115	0	1	0	Stator with Band 220V. 60Hz. 1800/3600 R.P.M.
514C3-116	0	1	0	Stator with Band 100V. 60Hz. 3600 R.P.M.
514C3-117	0	1	0	Stator with Band 110V. 50Hz. 3000 R.P.M.
514C3-118	0	1	0	Stator with Band 230V. 50Hz. 1500/3000 R.P.M.
514C3-119	0	1	0	Stator with Band 110V. 60Hz. 1800 R.P.M.
514C3-124	0	0	1	Stator with Band 110V. 50Hz. 3000 R.P.M.
514C3-125	0	0	1	Stator with Band 110V. 50Hz. 1500 R.P.M.
514C3-127	0	0	1	Stator with Band 110V. 60Hz. 3600 R.P.M.
514C3-128	0	0	1	Stator with Band 110V. 60Hz. 1800 R.P.M.
514C3-137	0	0	1	Stator with Band 220V. 50Hz. 3000 R.P.M.
514C3-138	0	0	1	Stator with Band 220V. 50Hz. 1500 R.P.M.
514C3-140	0	0	1	Stator with Band 220V. 60Hz. 3600 R.P.M.
514C3-141	0	0	1	Stator with Band 220V. 60Hz. 1800 R.P.M.
514C3-132	0	0	1	Stator with Band 150V. 60Hz. 3600 R.P.M.
514C3-126	0	0	1	Stator with Band 110V. 50Hz. 1500/3000 R.P.M.
514C3-129	0	0	1	Stator with Band 110V. 60Hz. 1800/3600 R.P.M.
514C3-139	0	0	1	Stator with Band 220V. 50Hz. 1500/3000 R.P.M.
514C3-142	0	0	1	Stator with Band 220V. 60Hz. 1800/3600 R.P.M.
580C1-66	1	1	1	Automatic Cutout Switch—Dual Speed
580C1-70	1	1	1	Automatic Cutout Switch—Single Speed
597C2-14	1	1	1	Automatic Cutout 60Hz. 3600 R.P.M.
597C2-15	1	1	1	Automatic Cutout 50Hz. 3000 R.P.M.
597C2-16	1	1	1	Automatic Cutout 60Hz. 1800 R.P.M.
597C2-17	1	1	1	Automatic Cutout 50Hz. 1500 R.P.M.
597C2-25	1	1	1	Automatic Cutout 60Hz. 1800/3600 R.P.M.
597C2-18	1	1	1	Automatic Cutout 50Hz. 1500/3000 R.P.M.
783C1-3	1	1	1	Ground Wire

STATOR WITH BAND

SINGLE PHASE—SINGLE SPEED
(See Page 10 for Ratings)

514C3-64	514C3-117
514C3-65	514C3-119
514C3-67	514C3-124
514C3-68	514C3-125
514C3-73	514C3-127
514C3-74	514C3-128
514C3-76	514C3-137
514C3-77	514C3-138
514C3-72	514C3-140
514C3-93	514C3-141
514C3-109	514C3-132
514C3-110	
514C3-113	
514C3-116	

SINGLE PHASE—DUAL SPEED
(See Page 10 for Ratings)

514C3-66	514C3-126
514C3-69	514C3-129
514C3-75	514C3-139
514C3-78	514C3-142
514C3-114	
514C3-115	
514C3-118	

NOTE: L.H. indicates left hand thread. All other are right hand.

WARNING: Terminal Block must be grounded. Attach ground wire to ground terminal "E" on Terminal Block.

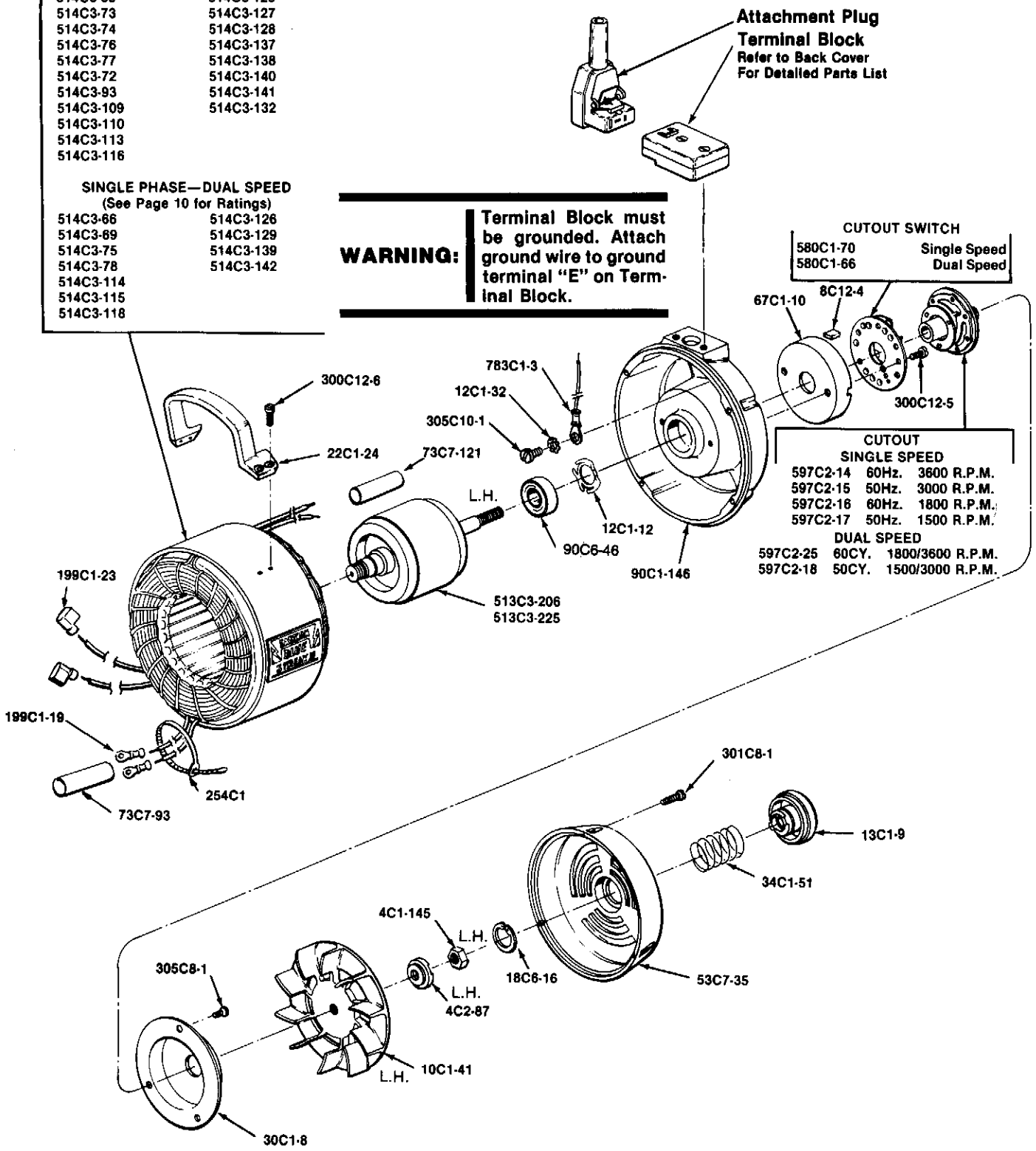

Eastman machine COMPANY

Three Phase

Motor Assemblies

(Single and Dual Speed)

Illustrated Parts List

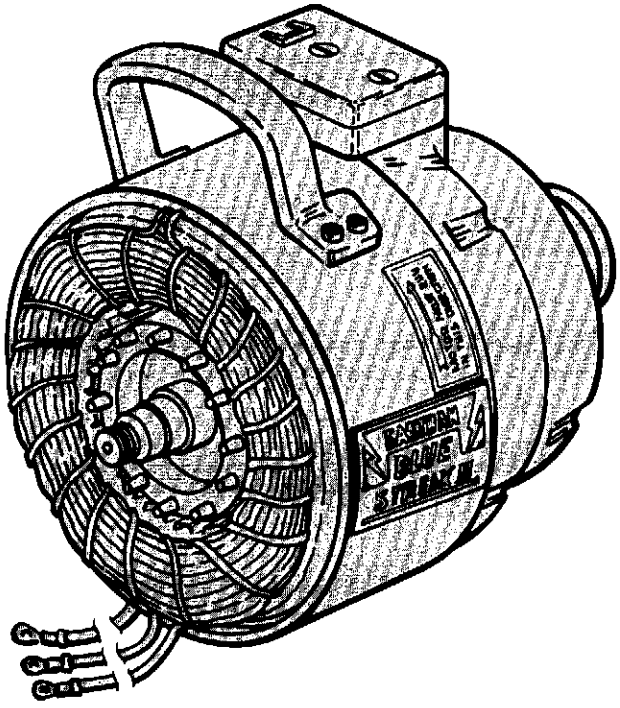

Part No.	No. Req'd. Class 625	Class 627	Class 629	Description
1C4-8	1	1	1	Spacing Sleeve
4C1-145	1	1	1	Shaft Lock Nut
4C2-87	1	1	1	Clutch Nut
10C1-41	1	1	1	Rotor Fan
12C1-12	1	1	1	Loading Spring Washer
12C1-32	1	1	1	Lock Washer
13C1-9	1	1	1	Turning Knob
18C6-16	1	1	1	Retaining Ring
22C1-24	1	1	1	Carrying Handle
30C1-8	1	1	1	Cover for Cutout
34C1-51	1	1	1	Clutch Spring
53C7-35	1	1	1	Fan Cover
73C7-93	1	1	1	Insulation
73C7-121	1	1	1	Tubing for Lead Wires
90C1-146	1	1	1	Rear Bearing Housing
90C6-46	1	1	1	Rear Ball Bearing
199C1-19	3	3	3	Wire Lug
254C1	1	1	1	Cable Tie
300C12-3	2	2	2	Screw, 8-32 x 3/8 Round Hd.
300C12-6	4	4	4	Screw, 8-32 x 1/2 Round Hd.
301C8-1	3	3	3	Screw, 4-40 x 1/2 Fillister Hd.
302C15-7	1	1	1	Screw, 10-32 x 1 Flat Hd.
305C8-1	3	3	3	Screw, 4-40 x 1/4 Binding Hd.
305C10-1	1	1	1	Screw, 6-32 x 1/4 Binding Hd.
513C3-208	1	0	1	Rotor with Shaft
513C3-225	0	1	0	Rotor with Shaft
514C3-79	1	0	0	Stator with Band 220V. 50Hz. 3000 R.P.M.
514C3-80	1	0	0	Stator with Band 220V. 50Hz. 1500 R.P.M.
514C3-81	1	0	0	Stator with Band 208V. 60Hz. 3600 R.P.M.
514C3-82	1	0	0	Stator with Band 220V. 60Hz. 3600 R.P.M.
514C3-83	1	0	0	Stator with Band 220V. 60Hz. 1800 R.P.M.
514C3-84	1	0	0	Stator with Band 220V. 50cy. 1500/3000 R.P.M.
514C3-86	1	0	0	Stator with Band 380V. 50Hz. 3000 R.P.M.
514C3-87	1	0	0	Stator with Band 380V. 50cy. 1500/3000 R.P.M.
514C3-93	1	0	0	Stator with Band 220/380V. 50Hz. 3000 R.P.M.
514C3-98	1	0	0	Stator with Band 220V. 5cy. 1500/3000 R.P.M.
514C3-135	0	0	1	Stator with Band 208V. 60Hz. 3600 R.P.M.
514C3-143	0	0	1	Stator with Band 220V. 50Hz. 3000 R.P.M.
514C3-144	0	0	1	Stator with Band 220V. 50Hz. 1500 R.P.M.
514C3-145	0	0	1	Stator with Band 220V. 50cy. 1500/3000 R.P.M.
514C3-146	0	0	1	Stator with Band 220V. 60Hz. 3600 R.P.M.
514C3-147	0	0	1	Stator with Band 220V. 60Hz. 1800 R.P.M.
514C3-148	0	0	1	Stator with Band 220V. 60cy. 1500/3600 R.P.M.
514C3-151	0	0	1	Stator with Band 380V. 50Hz. 3000 R.P.M.
514C3-152	0	0	1	Stator with Band 380V. 50Hz. 1500 R.P.M.
514C3-153	0	0	1	Stator with Band 380V. 50cy. 1500/3000 R.P.M.
514C3-154	0	0	1	Stator with Band 220/380V. 50Hz. 3000 R.P.M.
514C3-155	0	1	0	Stator with Band 220V. 60Hz. 3600 R.P.M.
514C3-157	0	1	0	Stator with Band 220V. 50Hz. 3000 R.P.M.
514C3-158	0	1	0	Stator with Band 220V. 50cy. 1500/3000 R.P.M.
514C3-161	0	1	0	Stator with Band 380V. 50Hz. 3000 R.P.M.
783C1-3	1	1	1	Ground Wire

NOTE: Please specify model and serial number of machine when ordering parts.

STATOR WITH BAND
THREE PHASE—SINGLE SPEED
(See Page 12 for Ratings)

514C3-79	514C3-143
514C3-80	514C3-144
514C3-81	514C3-135
514C3-82	514C3-146
514C3-83	514C3-147
514C3-86	514C3-154
514C3-93	514C3-155
514C3-151	514C3-157
514C3-152	514C3-161

THREE PHASE—DUAL SPEED
(See Page 12 for Ratings)

514C3-84	514C3-148
514C3-98	514C3-145
514C3-87	514C3-153
514C3-145	514C3-158

NOTE: L.H. indicates left hand thread. All other are right hand.

WARNING: Terminal Block must be grounded. Attach ground wire to ground terminal "E" on Terminal Block.

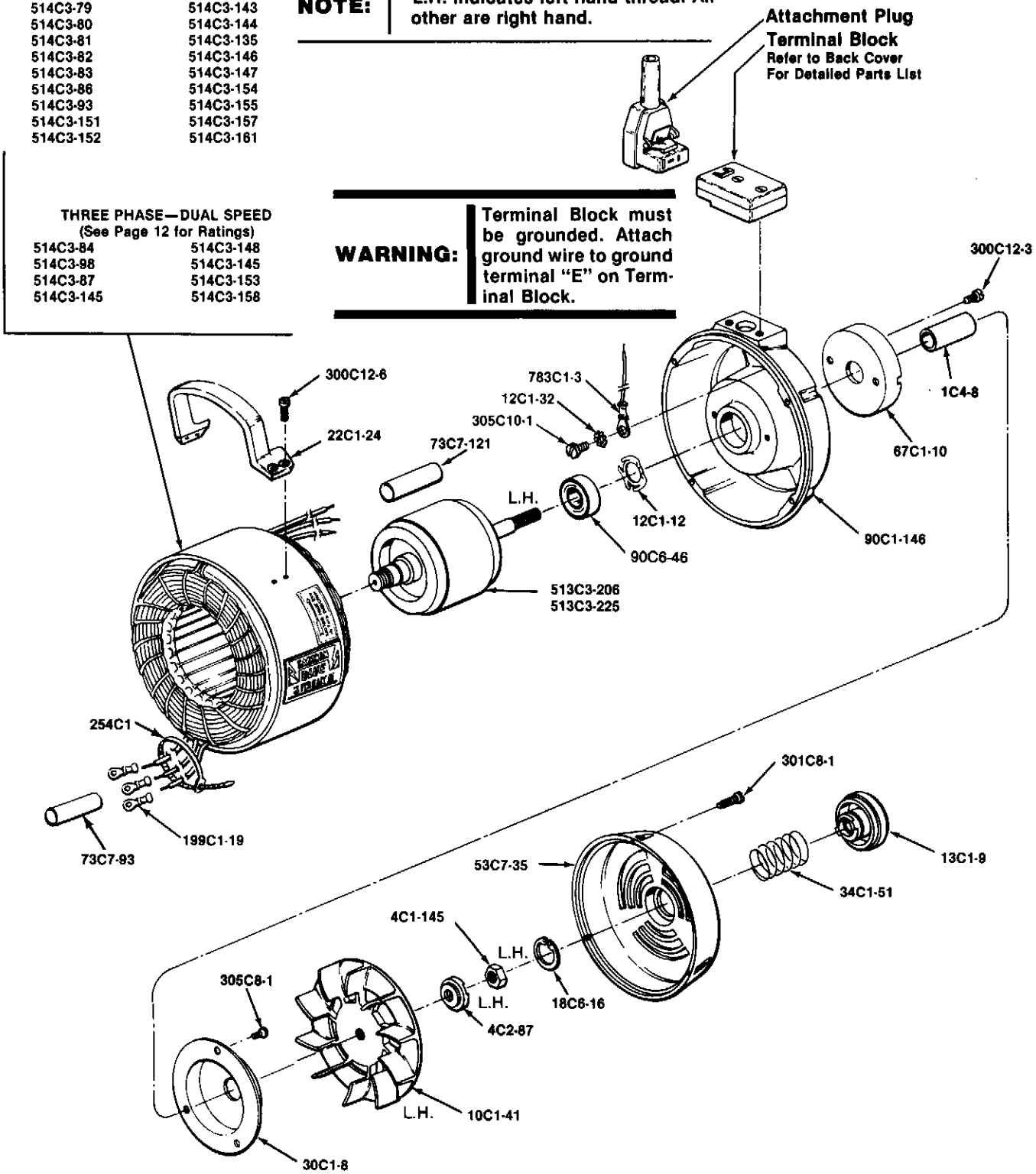

Front Bearing Housing Assembly

Illustrated Parts List

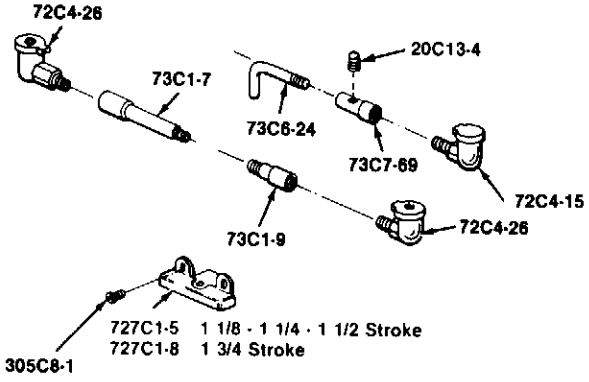

CLASS 625 OIL SYSTEM ONLY

NOTE: Please specify model and serial number of machine when ordering parts.

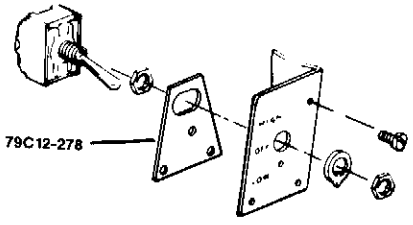

GROUNDING PLATE INSTALLATION FOR CLASS 625 ONLY

Part No.	No. Req'd. Class 625	Class 627	Class 629	Description
4C1-111	1	1	1	Operating Handle Lock Nut
4C1-132	1	1	1	Crank Ball Bearing Lock Nut
4C1-190	1	1	1	Lock Nut for Shaft
4C2-91	3	3	3	Nut for Guide Screw
4C2-110	1	1	1	Stop Nut
4C3-8	3	3	3	Guide Adjustment Nut
8C4-37	1	1	1	Switch Insulation
91C4-25	2	2	2	Rivet Crosshead
11C12-92	1	1	1	Shaft for Ball Bearing
12C1-21	2	2	2	Shakeproof Washer
12C1-22	0	1	1	Lock Washer
12C1-24	1	1	1	Knife Lock Washer
12C10-2	3	3	3	Washer
12C15-14	4	6	6	Guide Washer
12C15-53	1	1	1	Connecting Rod Washer
15C13-23	2	2	2	Stud, Upper
15C13-34	1	1	1	Stud, Lower L.H. Mounting
15C13-39	1	1	1	Stud, Lower R.H. Mounting

Part No.	No. Req'd.			Description
17C4-8	1	1	1	Wrist Pin
20C5-17	2	2	2	Connecting Rod Clamp Screw
20C12-62	1	1	1	Front Housing Plug Screw
20C12-79	1	1	1	Screw for Handle Bracket
20C12-122	2	0	0	Guide Hold Down Screw
20C12-171	1	1	1	Screw, Button Hd.
20C13-4	1	0	0	Set Screw
20C13-14	3	0	0	Guide Lock Screw
20C13-15	3	3	3	Guide Adjustment Screw
20C13-95	0	1	1	Screw, 6-32 x 1/4 Self Tapping
24C1-3	1	1	1	Knife Lock Bolt
34C10-142	1	1	1	Spring for Capacitor
52C5-161	1	1	1	Switch Base - Single Speed 1 & 3 Phase
52C5-162	1	1	1	Switch Base - Dual Speed 1 Phase
52C5-163	1	1	1	Switch Base - Dual Speed 3 Phase
53C2-98	1	1	1	Switch Cover
53C6-1	0	1	1	Cover for Oil Tube
53C11-91	1	1	1	Capacitor Cover
54C4-32	1	1	1	Wrist Pin Plug
54C4-76	0	1	1	Oil Gauge Plug
54C4-59	0	1	1	Oil Tube Plug
62C1-140	1	1	1	Handle Bracket
71C3-18	1	1	1	Front Ball Bearing Retainer
72C4-15	1	0	0	Oil Cup
72C4-26	2	0	0	Oil Cup
72C4-28	0	1	1	Oil Hole Cover
73C1-7	1	0	0	Oil Tube, L.H. Guide
73C1-9	1	0	0	Oil Tube, R.H. Guide
73C6-24	1	0	0	Oil Tube for Wrist Pin
73C7-69	1	0	0	Oil Tube for Wrist Pin
73C7-134	0	1	1	Oil Tube
79C12-278	1	0	0	Switch Grounding Plate
85C1-52	1	1	1	Crank 1-1/8 Stroke
85C1-46	1	1	1	Crank 1-1/4 Stroke
85C1-45	1	1	1	Crank 1-1/2 Stroke
85C1-44	1	1	1	Crank 1-3/4 Stroke
90C2-139	1	0	0	Front Bearing Housing
90C2-148	0	1	1	Front Bearing Housing
90C6-38	1	1	1	Front Ball Bearing
90C6-46	1	1	1	Sealed Crank Ball Bearing
160C1-1	0	1	1	Glass Tube
191C1-28	0	1	1	1/8" Dia. x 4" Long Wicking
191C1-30	0	1	1	1/8" Dia. x 6" Long Wicking
191C1-31	0	1	1	1/8" Dia. x 3-1/2" Long Wicking
191C1-32	0	1	1	1/8" Dia. x 1/2" Long Wicking
191C1-38	0	1	1	1/8" Dia. x 3/8" Long Wicking
201-C1-11	0	1	1	Eyelet
300C3-2	0	4	4	2-56 x 1/8 Long - Round Hd. Screw
300C10-4	2	2	2	Screw, 6-32 x 3/8 Round Hd.
308C12-1	1	3	3	Screw, 8-32 x 3/8 Soc. Hd Cap
302C8-2	0	1	1	Screw, 4-40 x 3/4 Flat Head
302C10-4	4	4	4	Screw, 6-32 x 5/16 Flat Hd.
305C8-1	7	7	7	Screw, 4-40 x 1/4 Binding Hd.
308C14-1	4	6	6	Guide Hold Down Screw
309C15-5	3	3	3	Guide Adjustment Screw
525C1-0	1	0	0	L.H. & R.H. Guides 1-3/4 Stroke
525C1-1	1	0	0	L.H. & R.H. Guides 1-1/2 Stroke
525C1-2	1	0	0	L.H. & R.H. Guides 1-1/4 Stroke
525C1-3	1	0	0	L.H. & R.H. Guides 1-1/8 Stroke
525C1-7	0	1	1	L.H. & R.H. Guides 1-1/8 Stroke
525C1-6	0	1	1	L.H. & R.H. Guides 1-1/4 Stroke
525C1-5	0	1	1	L.H. & R.H. Guides 1-1/2 Stroke
525C1-4	0	1	1	L.H. & R.H. Guides 1-3/4 Stroke
531C1-53	1	1	1	Operating Handle
531C1-76*	1 (ea. machine class)			Cushion Grip Handle
579C2-17	1	1	1	Cross Head (With Wrist Pin, Lock Washer & Bolt)
580C1-52	1	1	1	Switch - Dual Speed 3 Phase
580C1-65	1	1	1	Switch - Single Speed 3 Phase
580C1-81	1	1	1	Switch - Dual Speed 1 Phase
580C1-85	1	1	1	Switch, Single Speed 1 Phase
607C1-31	0	1	1	Oiling Device
664C1-6	1	1	1	Connecting Rod 1-1/8 Stroke
664C1-5	1	1	1	Connecting Rod 1-1/4 Stroke
664C1-4	1	1	1	Connecting Rod 1-1/2 Stroke
664C1-3	1	1	1	Connecting Rod 1-3/4 Stroke
706C1-4	1	0	1	Capacitor 110 Volt
706C1-5	1	0	1	Capacitor 220 Volt
706C1-13	0	1	0	Capacitor 110 Volt
706C1-16	0	1	0	Capacitor 220 Volt
727C1-5	1	0	0	Oil pad Holder 1-1/8 - 1-1/4 - 1-1/2 Stroke
727C1-8	1	0	0	Oil Pad Holder 1-3/4 Stroke
783C1-1	0	1	1	Ground Wire Assembly

*Denotes Optional Part

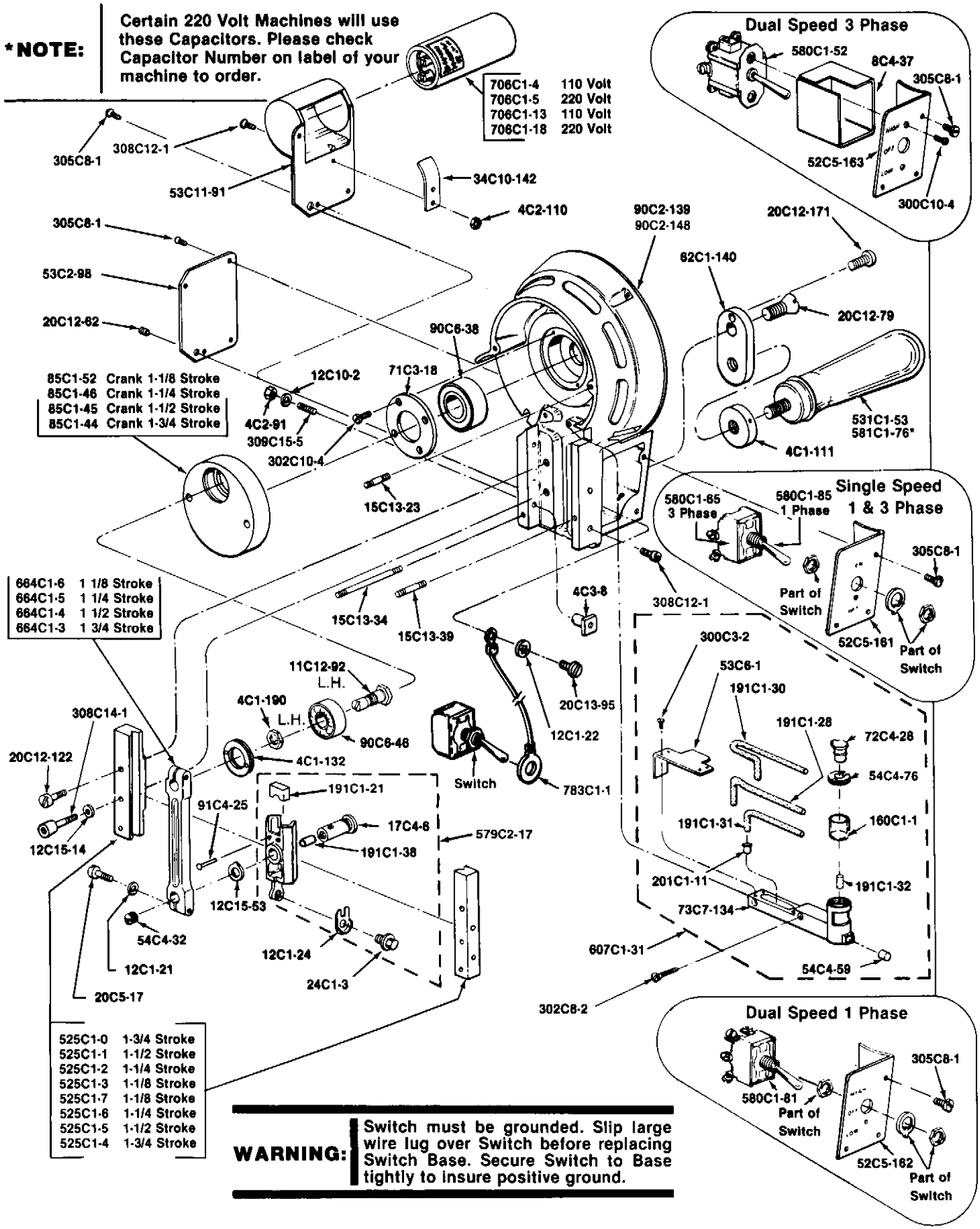

Eastman machine COMPANY

Sharpener Housing Assembly

(Front View)

Illustrated Parts List

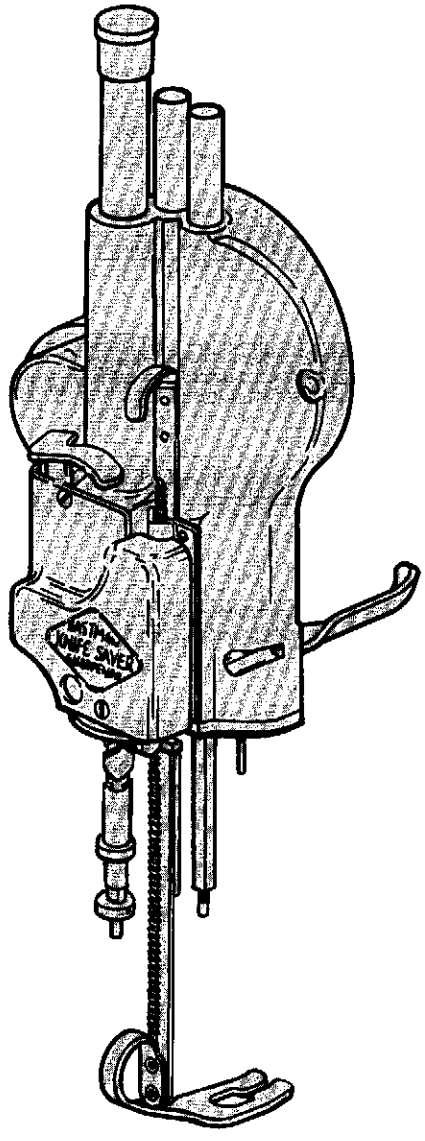

Part No.	No. Req'd.	Description
4C1-149	1	Stop Nut for Screw Shaft
4C1-161	1	Nut for Pressure Foot Lock
4C2-112	1	R.H. Nut for Screw Shaft
4C2-113	1	L.H. Nut for Screw Shaft
5C5-16	1	Collar for Extension
11C12-54	1	Shaft for Cam
12C15-57	1	Spring Washer for Release Lever
12C15-69	1	Washer for Lock Bracket
12C15-74	4	Thrust Washer for Nuts
12C15-91	2	Thrust Washer - Upper Nut
17C15-106	1	Roll Pin for Collar
20C4-17	1	Pressure Foot Lever Screw
20C12-13	1	Cam Shaft Spring Screw
20C12-113	1	Screw for Latch
20C12-117	2	Screw for Pressure Foot Shoe
20C12-156	1	Screw for Release Lever
20C12-137	1	Screw for Knife Guard Lock
22C3-2	1	Lift Handle for Knife Guard Rod
34C1-20	1	Cam Spring
34C8-12	1	Spring for Knife Guard Lock
34C10-179	1	Spring for Pressure Foot Lever 5"-13" Knife
34C10-107	1	Spring for Latch
53C11-72	1	Cover Over Cam
55C4-49	1	Spacer for Knife Guard Lock Bracket
68C1-192	1	Pressure Foot Shoe, All Strokes
71C3-15	3	Thrust Ball Bearing
86C7-34	1	Cap for Tube
90C4-47	2	Bearing for Cam Shaft
97C3-35	1	Latch for Cam
147C1-26	1	Extension for Screw Shaft
171C1-16	1	Lock (Only) for Pressure Foot
300C10-1	2	Screw, 6-32 x 3/16 Round Hd.
300C10-4	4	Screw, 6-32 x 3/8 Round Hd.
302C10-4	1	Screw, 6-32 x 5/16 Flat Hd.
302C10-8	1	Screw, 6-32 x 3/4 Flat Hd.
309C15-7	1	Set Screw for Cam
553C1-7	1	Knife Guard Lock Bracket Complete
553C1-8	1	Knife Guard Lock Bracket Only
605C1-36	1	Knife Guard Rod 6"-8" Knife
605C1-37	1	Knife Guard Rod 9"-10" Knife
605C1-33	1	Knife Guard Rod 11 ½" Knife
605C1-34	1	Knife Guard Rod 13" Knife
621C1-7	1	Release Lever with Cam
683C1-17	1	Lever, Pressure Foot Rod
713C4-4	1	Screw Shaft With Extension, R. & L. Hand Nuts 6"-8"
713C4-5	1	Screw Shaft with Extension, R, & L. Hand Nuts 9"-10"
713C4-6	1	Screw Shaft with Extension, R. & L. Hand Nuts 11½"
713C4-7	1	Screw Shaft With Extension, R. & L. Hand Nuts 13"
732C1-11	1	Sharpener Housing (With Bushings and Tubes) Only 5"-8" Knife
732C1-12	1	Sharpener Housing (With Bushings and Tubes) Only 9"-10" Knife
732C1-20	1	Sharpener Housing (With Bushings and Tubes) Only 11½" Knife
732C1-17	1	Sharpener Housing (With Bushings and Tubes) Only 13" Knife

NOTE: Please specify model and serial number of machine when ordering parts.

*THESE PARTS SOLD ONLY IN ASSEMBLIES AS FOLLOWS.

713C4-4	Screw Shaft with extension, R.&L. Hand Nuts 5" - 8"
713C4-5	Screw Shaft with extension, R.&L. Hands Nuts 9" - 10"
713C4-6	Screw Shaft with extension, R.&L. Hand Nuts 11½"
713C4-7	Screw Shaft with extension, R.&L. Hand Nuts 13"

NOTE: L.H. indicates left hand thread. All other are right hand.

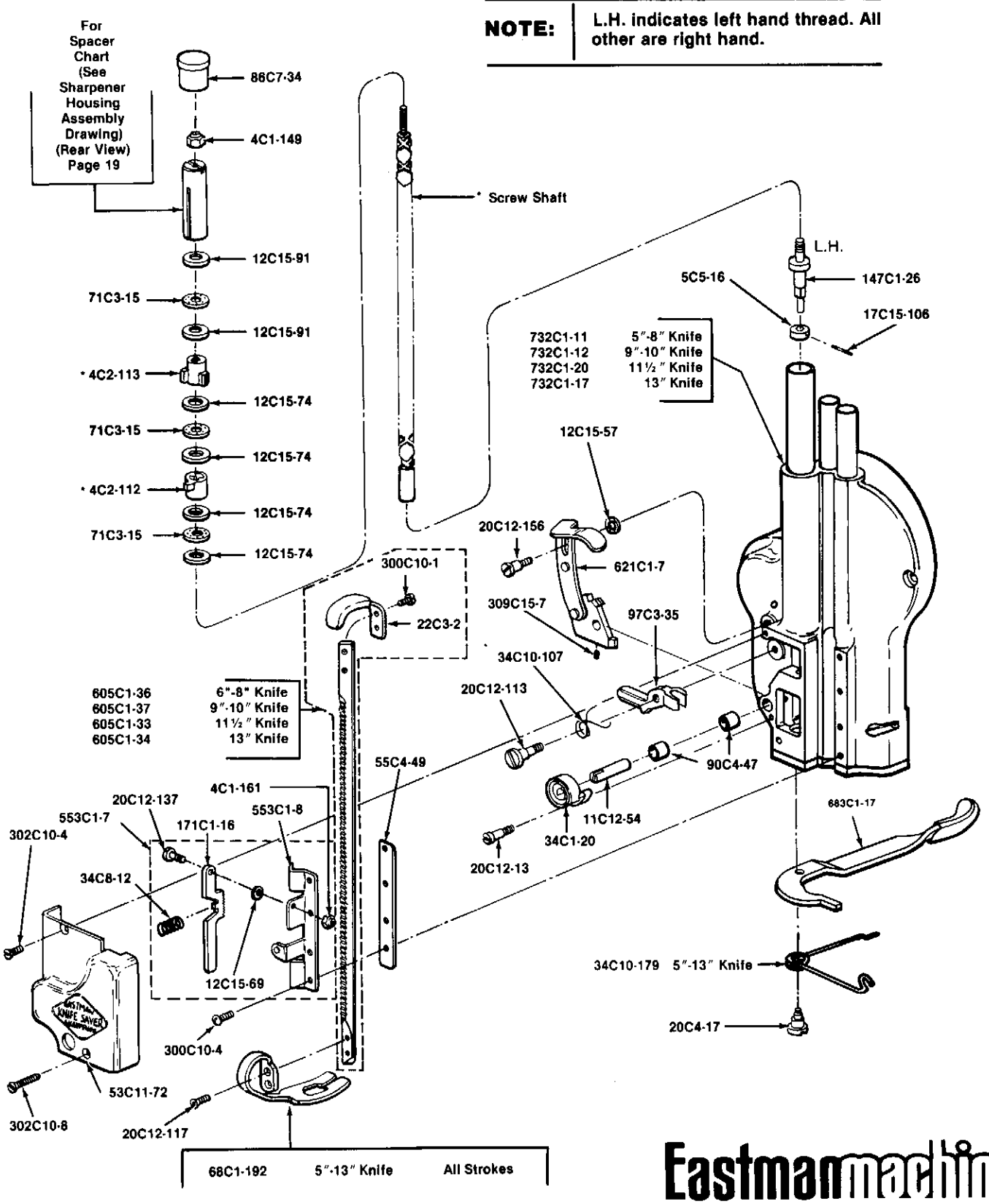

Eastman machine COMPANY

Sharpener Housing Assembly

(Rear View)

Illustrated Parts List

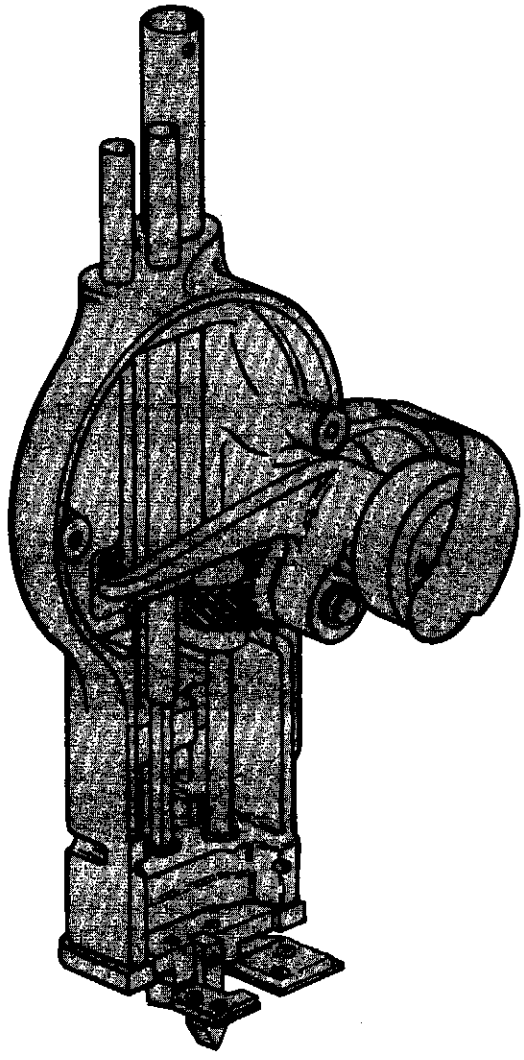

Part No.	No. Req'd.	Description
[illegible]	1	Lock Nut for Shaft
[illegible]	1	R.H. Follower Nut
[illegible]	1	L.H. Follower Nut
11C12-58	1	R.H. Square Shaft 5" - 8" Knife
11C12-59	1	R.H. Square Shaft 9" - 10" Knife
11C12-81	1	R.H. Square Shaft 11½" Knife
[illegible]	1	R.H. Square Shaft 13" Knife
[illegible]	1	L.H. Square Shaft 5" - 8" Knife
[illegible]	1	L.H. Square Shaft 9" - 10" Knife
11C12-80	1	L.H. Square Shaft 11½" Knife
11C12-84	1	L.H. Square Shaft 13" Knife
11C12-64	1	Shaft for Crank
[illegible]	2	Thrust Washer
[illegible]	2	Thrust Washer for Bottom Plate
[illegible]	1	Washer for Shaft
17C15-78	1	Pin for Bell Crank
17C15-82	1	Pin for Sharpener Housing
17C15-103	1	Roll Pin for Push Rod
17C15-113	1	Spreader Pin
18C6-8	1	Retaining Ring for Shaft
18C6-28	1	Retaining Ring for Bell Crank
34C10-89	1	Spring for Bell Crank
34C10-183	1	Spring for Bell Crank
53C11-60	1	Cover for Driver
55C4-44	1	Spacer for Bell Bearings
62C18-151	1	Sharpener Housing (Only)
65C6-79	1	Push Rod
71C1-10	1	Oil Retainer - Idler Gear
71C3-44	1	Spring Retainer
73C7-46	1	Tube for Square Shaft 4" - 8" Knife
73C7-47	1	Tube for Square Shaft 9" - 10" Knife
73C7-66	1	Tube for Square Shaft 11½" Knife
73C7-88	1	Tube for Square Shaft 13" Knife
73C7-48	1	Tube for Screw Shaft 4" - 8" Knife
73C7-49	1	Tube for Screw Shaft 9" - 10" Knife
73C7-85	1	Tube for Screw Shaft 11½" Knife
73C7-87	1	Tube for Screw Shaft 13" Knife
79C12-163	1	Bottom Plate
85C3-6	1	Bell Crank (Only)
87C3-8	1	Spiral Gear
87C3-40	1	Idler Gear
87C3-44	2	Spur Gear
87C3-53	1	Gear and Shaft
90C4-29	1	Bearing for Drive Shaft (Lower)
90C4-33	2	Bearing for Gears
90C4-34	1	Bearing for Bell Crank
90C4-42	1	Bearing for Drive Shaft
90C4-48	1	Bearing for Drive Shaft (Upper)
90C4-58	1	Bearing for Screw Shaft
[illegible]	2	Ball Bearing for Crank
[illegible]	1	Key
191C1-21	1	Felt Pad for Cross Head
300C7-1	1	Screw, 4-36 x 1/8 Lg. Round Hd.
300C7-2	3	Screw, 4-36 x 3/16 Round Hd.
[illegible]	2	Screw, 6-32 x 3/16 Round Hd.
[illegible]	1	Screw, 6-32 x 1/2 Flat Hd.
[illegible]	3	Screw, 6-32 x 3/8 Flat Hd.
584C2-3	1	Bell Crank with Pin & Bearing (Only)
584C3-16	1	Bell Crank Complete with Lever
602C1-7	1	Slow Speed Driver Ass'y
[illegible]	1	Driver Pulley with Driver
[illegible]	1	Driver Shaft with Gear
727C1-6	1	Oil Pad & Holder

NOTE: Please specify model and serial number of machine when ordering parts.

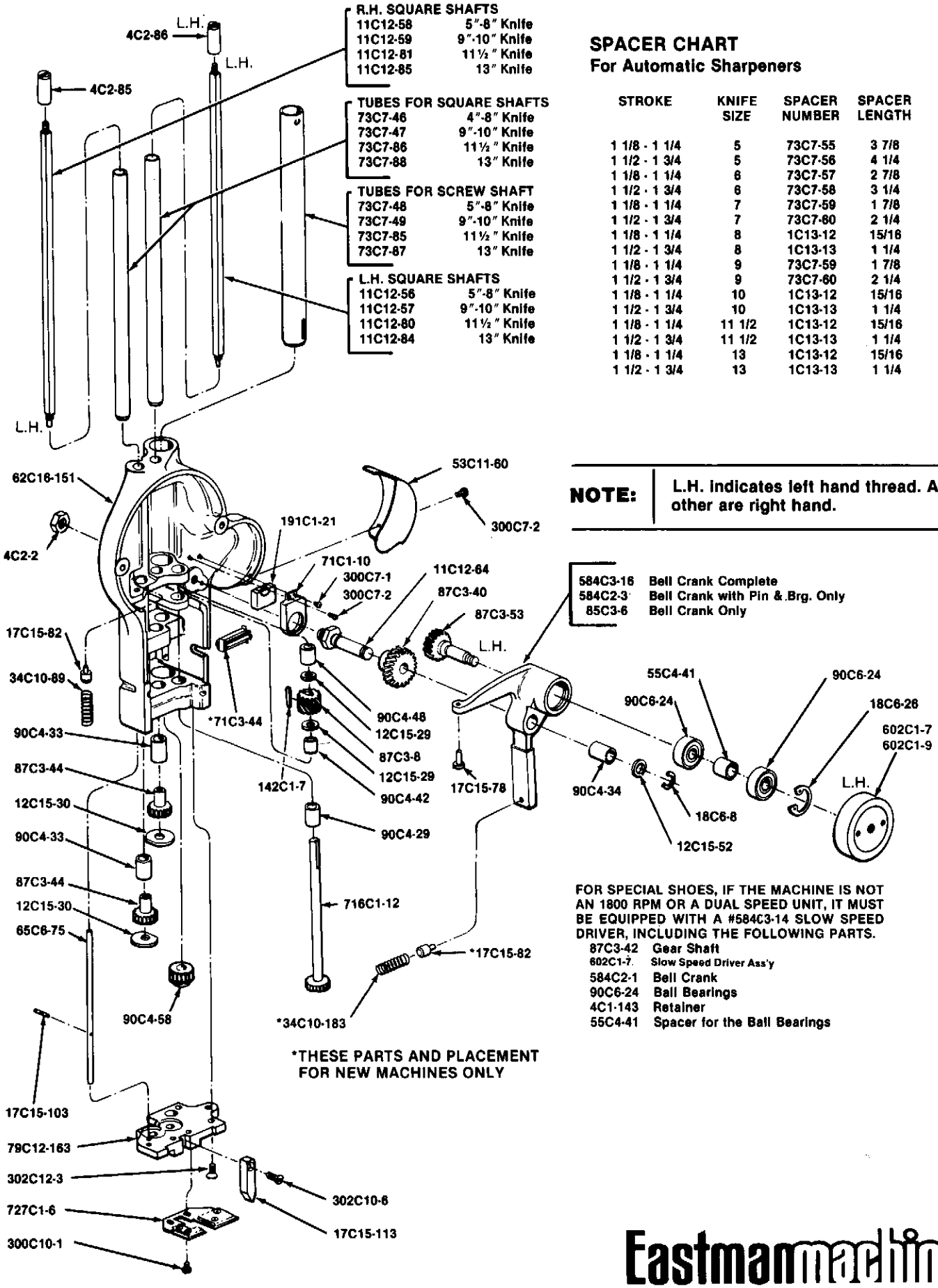

SPACER CHART
For Automatic Sharpeners

STROKE	KNIFE SIZE	SPACER NUMBER	SPACER LENGTH
1 1/8 - 1 1/4	5	73C7-55	3 7/8
1 1/2 - 1 3/4	5	73C7-56	4 1/4
1 1/8 - 1 1/4	6	73C7-57	2 7/8
1 1/2 - 1 3/4	6	73C7-58	3 1/4
1 1/8 - 1 1/4	7	73C7-59	1 7/8
1 1/2 - 1 3/4	7	73C7-60	2 1/4
1 1/8 - 1 1/4	8	1C13-12	15/16
1 1/2 - 1 3/4	8	1C13-13	1 1/4
1 1/8 - 1 1/4	9	73C7-59	1 7/8
1 1/2 - 1 3/4	9	73C7-60	2 1/4
1 1/8 - 1 1/4	10	1C13-12	15/16
1 1/2 - 1 3/4	10	1C13-13	1 1/4
1 1/8 - 1 1/4	11 1/2	1C13-12	15/16
1 1/2 - 1 3/4	11 1/2	1C13-13	1 1/4
1 1/8 - 1 1/4	13	1C13-12	15/16
1 1/2 - 1 3/4	13	1C13-13	1 1/4

NOTE: L.H. indicates left hand thread. All other are right hand.

*THESE PARTS AND PLACEMENT FOR NEW MACHINES ONLY

FOR SPECIAL SHOES, IF THE MACHINE IS NOT AN 1800 RPM OR A DUAL SPEED UNIT, IT MUST BE EQUIPPED WITH A #584C3-14 SLOW SPEED DRIVER, INCLUDING THE FOLLOWING PARTS.

- 87C3-42 Gear Shaft
- 602C1-7 Slow Speed Driver Ass'y
- 584C2-1 Bell Crank
- 90C6-24 Ball Bearings
- 4C1-143 Retainer
- 55C4-41 Spacer for the Ball Bearings

Eastman machine COMPANY

Lower Gear Bracket Assembly

Illustrated Parts List

Complete Sharpener Assembly Numbers: 637C10-*					
		Machine Stroke			
Height of Machine		1⅛"	1¼"	1½"	1¾"
	5"	-20,	-21,	-22,	-23,
	6"	-24,	-25,	-26,	-27,
	7"	-28,	-29,	-30,	-31,
	8"	-32,	-33,	-34,	-35,
	9"	-36,	-37,	-38,	-39,
	10"	-40,	-41,	-42,	-43,
	11½"	-44,	-45,	-46,	-47,
	13"	-48,	-49,	-50,	-51

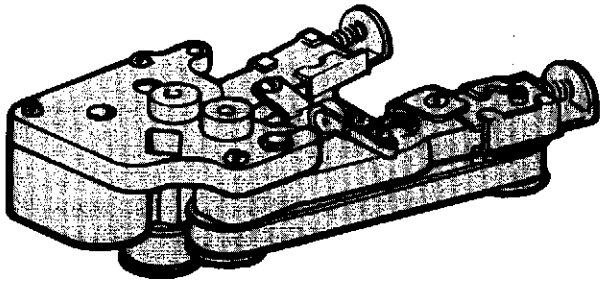

Part No.	No. Req'd.	Description
4C1-156	1	Jam Nut
4C2-63	2	Nut for Sharpener Shoe Screw
12C15-63	4	Washer
17C15-106	2	Roll Pin (For Pulley 152C1-19)
20C6-25	1	Adjusting Screw
20C12-57	2	Screw for Sharpener Shoe (Wave knife only)
20C12-143	1	Screw for Clamping Arm
20C12-153	2	Screw for Sharpener Shoe
21C14-14	2	Bushing for Sharpener Shoe
34C10-45	2	Spring for Pulley Slide
34C10-47	1	L.H. Sharpener Shoe Spring (Wave knife only)
34C10-57	1	R.H. Sharpener Shoe Spring (Wave knife only)
34C10-123	1	Spring for Arm
34C10-148	1	L.H. Sharpener Shoe Spring
34C10-149	1	R.H. Sharpener Shoe Spring
35C7-28	1	Clamping Arm for Shoe
53C4-78	1	Gear Cover
54C4-35	1	Grease Plug
62C6-31	1	Bracket Only
70C4-32	1	Guide Back of Standard
79C12-218	2	Wear Plate 5" - 10" Knife
79C12-219	2	Wear Plate 11½" - 13" Knife
87C3-50	1	Gear on Screw Shaft
87C5-13	1	Intermediate Gear
90C4-47	1	Bearing for Intermediate Gear
90C4-51	1	Bearing for Screw Shaft
90C4-59	2	Bearing for Shaft Extension
147C1-28	1	R.H. Shaft Extension
147C1-29	1	L.H. Shaft Extension
152C1-19	2	Front Pulley for Belt
209C1	2	Neoprene Band for Pulley
300C7-3	4	Screw, 4-36 x 1/4 Round Hd.
300C10-2	2	Screw, 6-32 x 1/4 Round Hd.
300C10-6	3	Screw, 6-32 x 1/2 Round Hd.
301C7-2	2	Screw, 4-36 x 3/16 Fillister Hd.
301C10-3	1	Screw, 6-32 x 3/8 Fillister Hd.
308C12-2	1	Stop Screw, L.H. Shoe
712C1	1	R.H. Slide with Pulley
712C1-1	1	L.H. Slide with Pulley
715C1-19	1	Lower Gear Bracket with Cover, Brgs., Screws & Wear Plate 5" - 10" Knife
715C1-20	1	Lower Gear Bracket with Cover, Brgs., Screws & Wear Plate 11½" - 13" Knife
715C1-22	1	Lower Gear Bracket (Complete) 5" - 10" Knife
715C1-23	1	Lower Gear Bracket (Complete) 11½" - 13" Knife
728C1-5	2	Stabilizer
743C1-26	1	R.H. Shoe (Wave knife only)
743C1-27	1	L.H. Shoe (Wave knife only)
743C1-28	1	R.H. Pre-set Sharpener Shoe (Only)
743C1-29	1	L.H. Pre-set Sharpener Shoe (Only)
820C1-7	1	L.H. Complete Shoe Assembly
820C1-8	1	R.H. Complete Shoe Assembly

NOTE: Please specify model and serial number of machine when ordering parts.

NOTE: L.H. indicates left hand thread. All other are right hand.

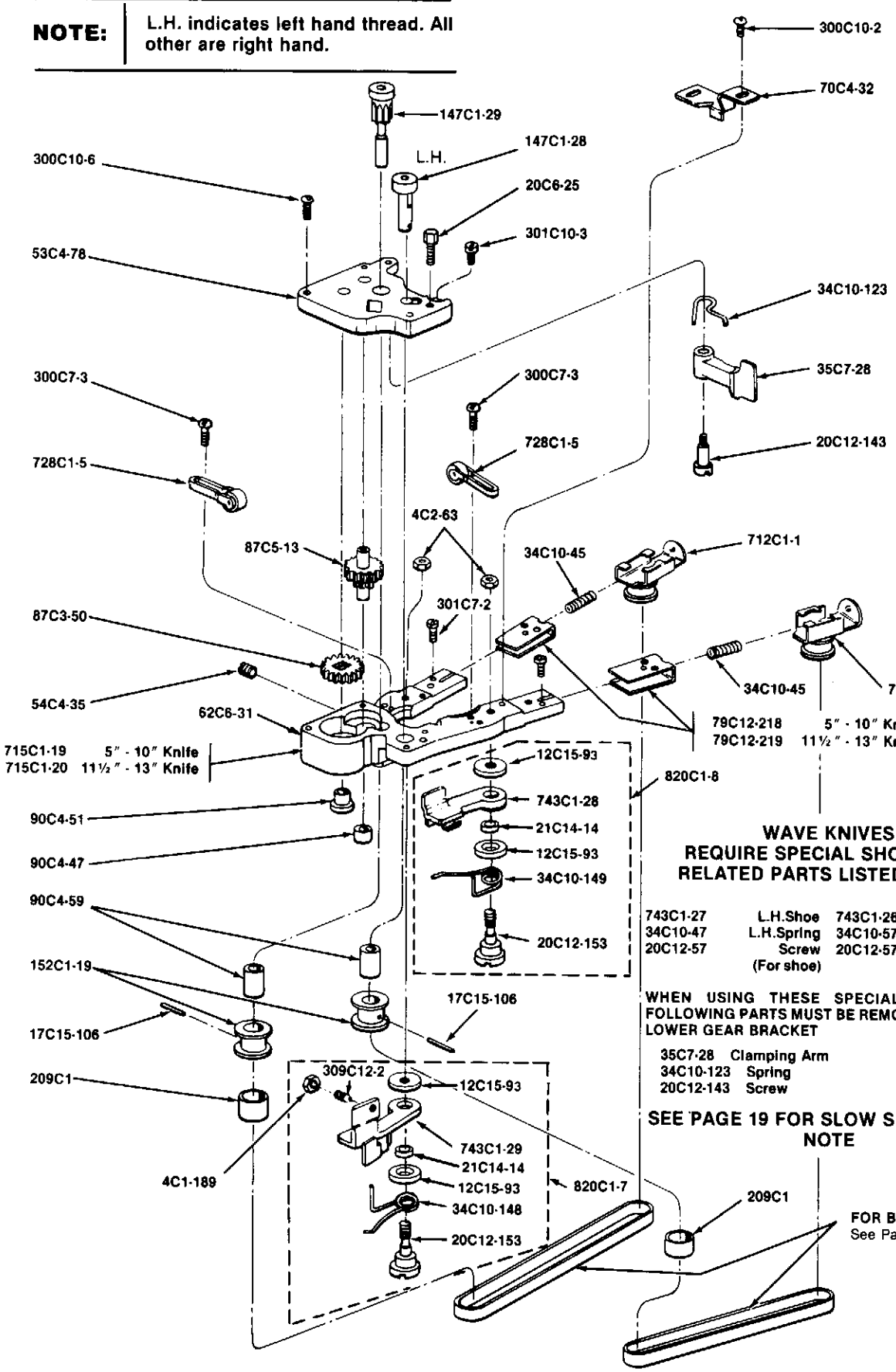

WAVE KNIVES REQUIRE SPECIAL SHOES AND RELATED PARTS LISTED BELOW

743C1-27	L.H.Shoe	743C1-26	R.H.Shoe
34C10-47	L.H.Spring	34C10-57	R.H.Spring
20C12-57	Screw (For shoe)	20C12-57	Screw (For shoe)

WHEN USING THESE SPECIAL SHOES THE FOLLOWING PARTS MUST BE REMOVED FROM THE LOWER GEAR BRACKET

35C7-28 Clamping Arm
34C10-123 Spring
20C12-143 Screw

SEE PAGE 19 FOR SLOW SPEED DRIVE NOTE

FOR BELT LISTING
See Page 7

715C1-22 Lower Gear Bracket Assembly Complete for 5"-10" Knife
715C1-23 Lower Gear Bracket Assembly Complete for 11½"-13" Knife

Standard, and Base Plate Assembly

Illustrated Parts List

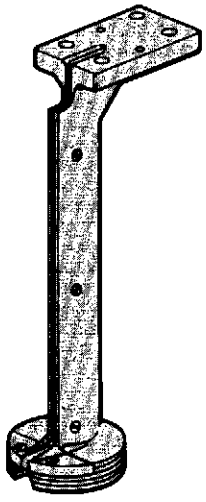

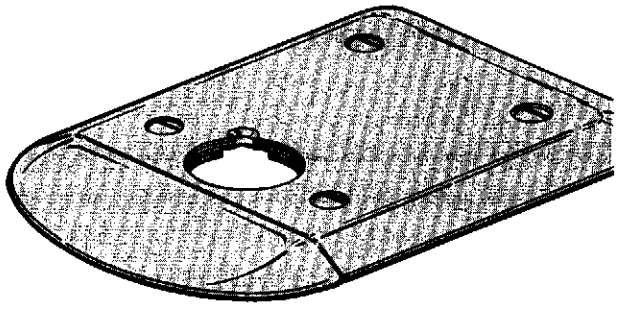

Part No.	No. Req'd.	Description
12C1-35	4	Lock Washer
12C15-77	1	Washer for Micro Fog Standard
17C1-4	3	Pin
17C6-9	2	Hinge Pin
20C5-12	8	Clamp Screw for Rollers
20C12-19	1	Knife Slide Screw
20C13-61	4	Hinge Pin Clamp Screw
34C1-57	2	Plate Wing Tension Spring
60C1-55	1	Plate Wing (For Small Plates)
60C1-56	1	Plate Wing (For Large Plates)
79C4-12/13	1	Throat Plates with Screws and Pins
79C4-24	1	Tapered & Relieved Throat Plates Ass'y.
213C1-1	5	Plate Stop
302C12-5	2	Screw, 8-32 x 3/8" Rnd. Hd.
505C3-223	1	Small Plate Complete (5" - 8" Knife)
505C3-224	1	Large Plate Complete (9" - 13" Knife)
505C3-226	1	Small Plate Complete (5" - 8" Knife) For 50 Cy. 1500 R.P.M. & Dual Speed Only
505C3-227	1	Large Plate Complete (9" - 13" Knife) For 50 Cy. 1500 R.P.M. & Dual Speed Only
505C3-243	1	Small Plate Complete (5" - 8" Knife) Used with Swivel Roller Assembly Only
505C3-244	1	Large Plate Complete (9" - 13" Knife) Used with Swivel Roller Assembly Only
528C1-112	1	Micro Fog Standard (Complete with slides and throat plates) 6" Knife
528C1-123	1	Standard (Complete with slides and throat plates) 5" Knife
528C1-120	1	Standard (Complete with slides and throat plates) 6" Knife
528C1-122	1	Standard (Complete with slides and throat plates) 7" Knife
528C1-121	1	Standard (Complete with slides and throat plates) 8" Knife
528C1-115	1	Standard (Complete with slides and throat plates) 9" Knife
528C1-116	1	Standard (Complete with slides and throat plates) 10" Knife
528C1-124	1	Standard (Complete with slides and throat plates) 11-1/2" Knife
528C1-125	1	Standard (Complete with slides and throat plates) 13" Knife
532C2-6	4	Rubber Mounted Roller (Complete)
532C2-7	6	Rubber Mounted Roller (Complete)
619C1-31	4	Roller Shaft (Complete)
643C1-44	1	Knife Slides (Complete with screws) 5" Knife
643C1-41	1	Knife Slides (Complete with screws) 6" Knife
643C1-42	1	Knife Slides (Complete with screws) 7" Knife
643C1-43	1	Knife Slides (Complete with screws) 8" Knife
643C1-48	1	Knife Slides (Complete with screws) 9" Knife
643C1-47	1	Knife Slides (Complete with screws) 10" Knife
643C1-53	1	Knife Slides (Complete with screws) 11½" Knife
643C1-45	1	Knife Slides (Complete with screws) 13" Knife
643C1-51	1	Knife Slides (Complete with screws) 6" Micro Fog
619C1-32	2	Swivel Roller Assembly

NOTE: Please specify model and serial number of machine when ordering parts.

STANDARDS COMPLETE W/SLIDES

528C1-123	5" Standard
528C1-120	6" Standard
528C1-122	7" Standard
528C1-121	8" Standard
528C1-115	9" Standard
528C1-116	10" Standard
528C1-124	11½" Standard
528C1-125	13" Standard

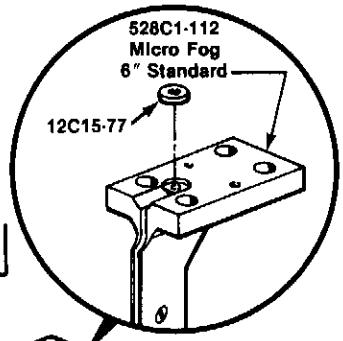

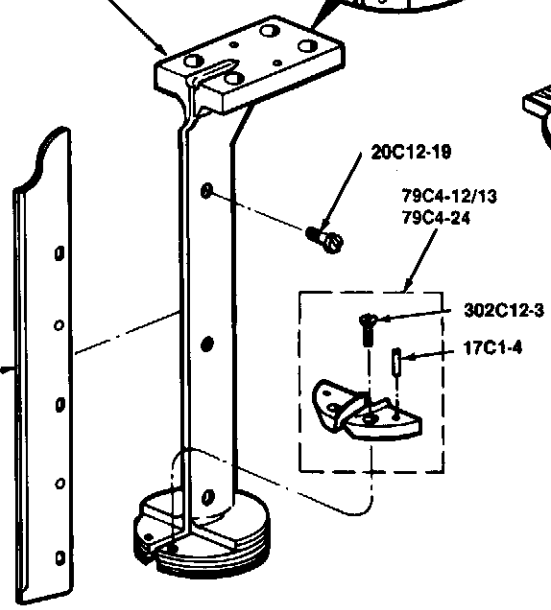

KNIFE SLIDES

643C1-44	5" Knife
643C1-41	6" Knife
643C1-42	7" Knife
643C1-43	8" Knife
643C1-46	9" Knife
643C1-47	10" Knife
643C1-53	11½" Knife
643C1-45	13" Knife
643C1-51	6" Micro Fog

INSTRUCTIONS FOR REMOVING WORN PLATE ROLLER SHELL

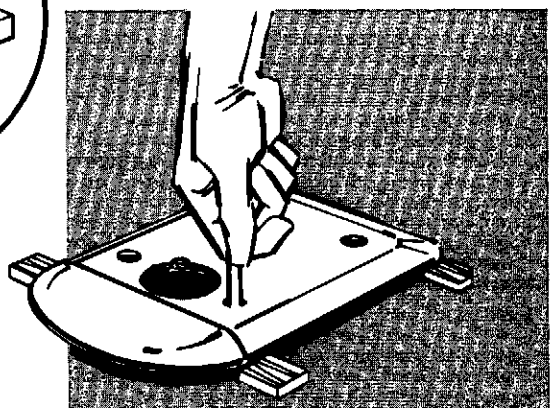

Place plate on blocks and press out roller shell from ring assembly as shown.
Roller shell (complete with shaft and bearings) may be ordered as required—Specify Part No. 619C1-30.
Note: To install new plate roller shell reverse above procedure with base plate inverted.

WARNING: Do not oil plate roller shells.

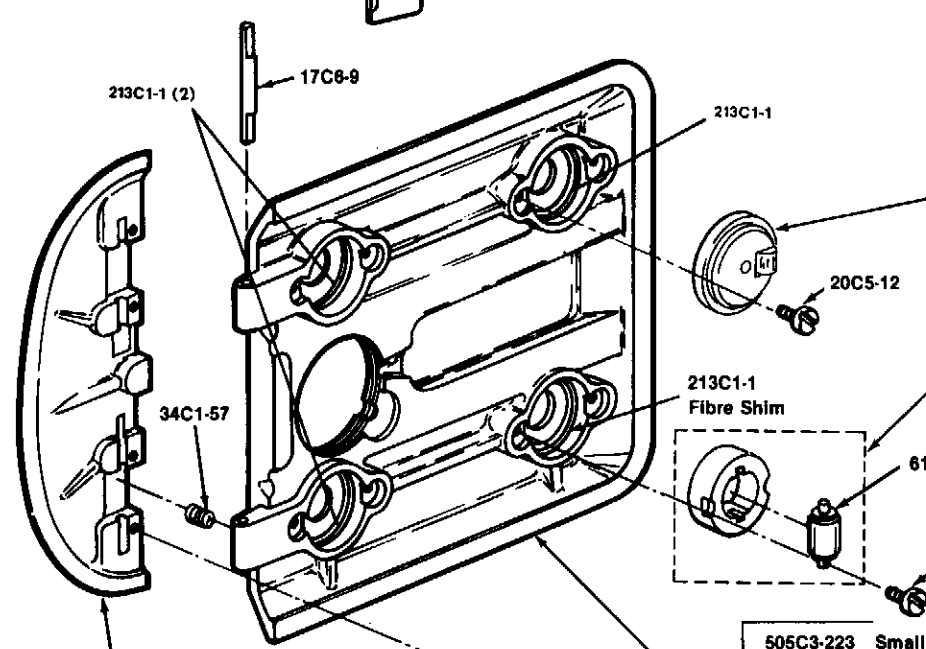

OPTIONAL

[illegible]

[illegible]	[illegible]
[illegible]	[illegible]
[illegible]	[illegible]

505C3-223	Small Plate for 5"-8" Knives
505C3-224	Large Plate for 9"-13" Knives

FOR 50 CY. 1500 R.P.M. & DUAL SPEED MACHINES ONLY

505C3-226	Small Plate for 5"-8" Knives
505C3-227	Large Plate for 9"-13" Knives

60C1-55	For Small Plates
60C1-56	For Large Plates

FOR COMPLETE LIST OF EASTMAN KNIVES AVAILABLE SEE PAGE 5.

Eastman machine COMPANY

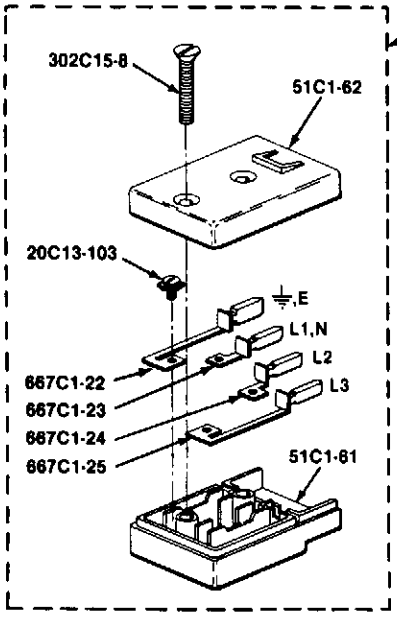

TERMINAL BLOCK

508C1-100
SHOWN

PLEASE SPECIFY VOLTAGE WHEN ORDERING PARTS

ATTACHMENT PLUG

523C1-100
SHOWN

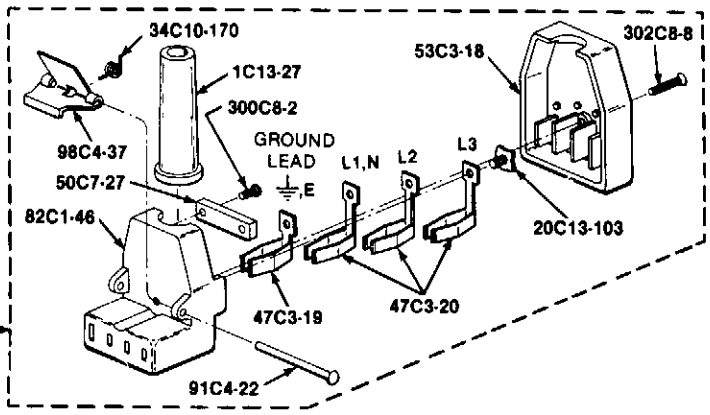

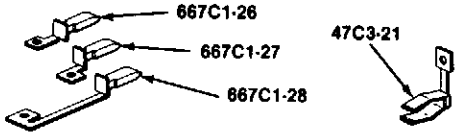

WARNING
Wiring Instructions
Eastman
Attachment Plugs

Electrical connections to this device should be made by a qualified electrician who is familiar with applicable codes and regulations. To ensure operator safety, a ground lead must be connected to terminal "E" on the attachment plug. Disconnect this equipment from electrical power before proceeding with any disassembly for adjustment inspection or repair.

Description	Part No.	EASTMAN 10A 380V 3~ (⏚,E L1,N L2 L3)	EASTMAN 10A 220V 3~ (⏚,E L1,N L2 L3)	EASTMAN 10A 220V ~ (⏚,E L1,N L2)	EASTMAN 15A 120V ~ (⏚,E L1,N L2)	EASTMAN 25A 42V ~ (⏚,E L1,N L3)
Attachment Plug	→	**523C1-99**	**523C1-100**	**523C1-101**	**523C1-102**	**523C1-103**
Cord Sleeve	1C13-27	1	1	1	1	1
U-Lock Screw	20C13-103	4	4	3	3	3
Spring	34C10-170	1	1	1	1	1
Terminal Sleeve	47C3-19	1	1	1	1	1
Terminal Sleeve (current)	47C3-20	2	3	1	1	1
Terminal Sleeve (current)	47C3-21	1	—	1	1	1
Cordclamp	50C7-27	1	1	1	1	1
Attachment Plug Cover	→	53C3-19	53C3-20	53C3-21	53C3-22	53C3-23
Attachment Plug Body	82C1-45	1	—	—	—	—
Attachment Plug Body	82C1-46	—	1	—	—	—
Attachment Plug Body	82C1-47	—	—	1	—	—
Attachment Plug Body	82C1-48	—	—	—	1	—
Attachment Plug Body	82C1-49	—	—	—	—	1
Rivet	91C4-22	1	1	1	1	1
Thumb Clip	98C4-37	1	1	1	1	1
Screw #4-40 x 3/8 Round Hd	300C8-1	—	—	2	2	—
Screw #4-40 x 1/2 Round Hd	300C8-2	2	2	—	—	2
Screw #4-40 x 7/8 Flat Hd	302C8-8	1	1	1	1	1
Terminal Block	→	**508C1-99**	**508C1-100**	**508C1-101**	**508C1-102**	**508C1-103**
U-Lock Screw	20C13-103	4	4	3	3	3
Terminal Block Bottom	51C1-61	1	1	1	1	1
Terminal Block Top	→	51C1-63	51C1-64	51C1-65	51C1-66	51C1-67
Screw #10-32 x 1-1/8 Flat Hd	302C15-8	2	2	2	2	2
Terminal Contact w/pin E	667C1-22	1	1	1	1	1
Terminal Contact w/pin L1,N	667C1-23	1	1	1	—	—
Terminal Contact w/pin L2	667C1-24	1	1	—	1	—
Terminal Contact w/pin L3	667C1-25	—	1	—	—	1
Terminal Contact w/pin L1,N	667C1-26	—	—	—	1	1
Terminal Contact w/pin L2	667C1-27	—	—	1	—	—
Terminal Contact w/pin L3	667C1-28	1	—	—	—	—

GUARANTEE

We guarantee our machines for six months from date of invoice against defective parts and workmanship and will repair or replace any machine going wrong from these causes when returned to us carrying charges prepaid. This guarantee does not contemplate making good damage caused by misuse or neglect, and is void if other than genuine Eastman knives, emery wheels and parts are used in the machine.

Eastman machine COMPANY
779 Washington St. • Buffalo, N.Y., U.S.A. 14203 • 716/856-2200 • Telex 4432018 • Cable EMCOBUF • Fax 716/856-1140

© 1988 EASTMAN MACHINE COMPANY